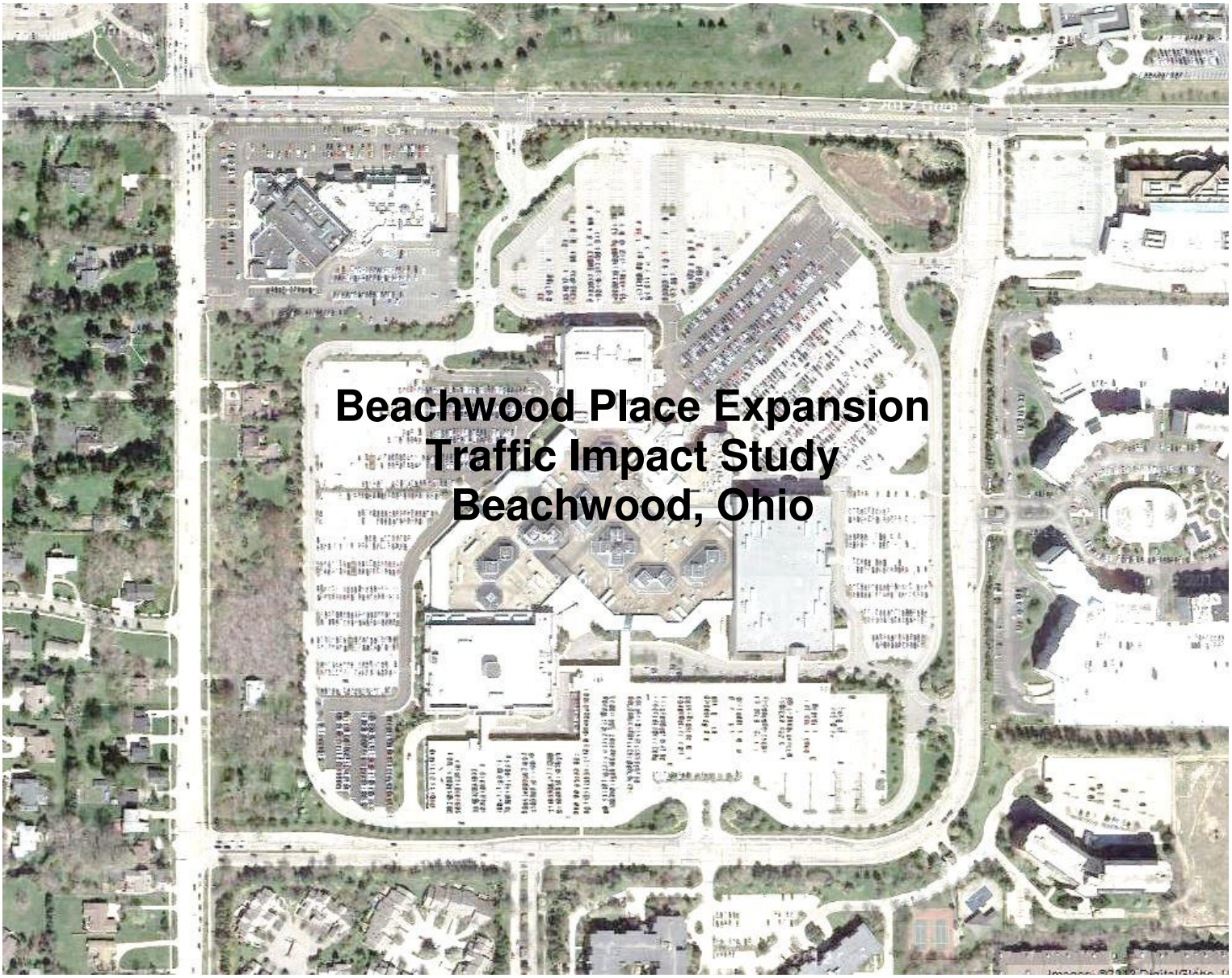

Beachwood Place Expansion
Traffic Impact Study
Beachwood, Ohio

URS Corporation
564 White Pond Drive
Akron, Ohio 44320
URS File #15017887

June 2013

Executive Summary

URS has been retained by General Growth Partners (GGP) to perform a traffic impact study for the proposed expansion of Beachwood Place mall, located in the southeast quadrant of the Cedar Road/Richmond Road intersection in Beachwood, Ohio. For the purposes of this study, 2014 is considered the Opening Year. The planned expansion will consist of 104,000 additional square feet of gross floor area, including three (3) restaurant outlots. The parking lot will also be expanded to the west.

Currently, the roadways surrounding the mall experience varying levels of congestion during peak periods. Some roadways and intersections are congested, while others are underutilized. The proposed mall expansion will not appreciably change these operations. Analysis indicates that there are some existing deficiencies at select left-turning movements in the study area. For example, the intersection of Cedar Road with Richmond Road is the most congested with long traffic queues and low service levels. However, observation indicates that the queues mostly are processed in one signal cycle. The intersection of Richmond Road with George Zeiger Drive also processes a good amount of traffic, with some queuing on Richmond Road, but traffic is processed efficiently by the traffic signal. Traffic along George Zeiger Drive is met with very little resistance, with very high service levels and little congestion. Once the additional traffic from the mall expansion is dispersed throughout the roadway network, no degradation in traffic service levels will occur.

Preliminary site plans for this expansion project initially considered a new mall access drive onto Richmond Road between Hilltop Drive and Community Drive in anticipation that insufficient roadway access existed to accommodate the additional site-generated traffic. However, once traffic analyses were conducted, it became evident that the existing roadways could, in fact, accommodate the expansion traffic. As such, no additional mall access points are recommended at this time. While there will be a slight increase in traffic dispersed about the roadway network, it is unlikely that such an increase will be perceptible to the travelling public or community as a whole. For example, it is anticipated that there will be an additional 17 cars on Richmond Road between Cedar Road and George Zeiger Drive, an increase of one percent. Fifty, or so, additional cars are anticipated to be on Cedar Road, which also represents an increase of just over one percent. This minor increase in traffic does not warrant any roadway or access improvements and can be absorbed by the current roadway system.

Table of Contents

1.0 Introduction 1
1.1 Site Location 1
1.2 Proposed Site Development 1
1.3 Study Scope 1
Exhibit 1 – Study Area Map 3
2.0 Existing and Planned Roadways 4
2.1 Existing Roadways 4
3.0 No-Build Traffic Conditions 5
3.1 Existing Traffic Volumes 5
Exhibit 2 – Opening Day Balanced PM Volumes (No-Build) 7
3.2 Rating System for Roadway Adequacy 8
Table 3.1 - Level of Service Criteria for Signalized Intersections 8
Table 3.2 - Level of Service Criteria for Unsignalized Intersections 9
3.3 No-Build Intersection Capacity Analysis 9
Exhibit 3 – LOS Definitions 11
Exhibit 4 – Opening Day PM Peak Hour LOS (No-Build) 12
4.0 Build Traffic Conditions 13
4.1 Site Traffic Generation and Distribution 13
Table 4.1 – Trip Generation 13
4.2 Combined Traffic Volumes 14
Exhibit 5 – Trip Distribution Pattern 15
Exhibit 6 – PM Peak Site Traffic 16
Exhibit 7 – Opening Day PM Volumes (Build) 17
4.3 Build Intersection Capacity Analysis 18
Exhibit 8 – Opening Day PM Peak Hour LOS (Build) 19
5.0 Recommendations and Conclusions 20

Appendices
Appendix A – Traffic Counts
Appendix B – No-Build Capacity Analysis
Appendix C – Build Capacity Analysis

STATE OF OHIO
ERIC WILLIAM SMITH
E-58426
REGISTERED
PROFESSIONAL ENGINEER

ERIC W. SMITH, REG. ENGINEER NO. E-58426

STATE OF OHIO
KEVIN P WESTBROOKS
#E-65607
REGISTERED
PROFESSIONAL ENGINEER

KEVIN P. WESTBROOKS, REG. ENGINEER NO. E-65607

Section 1
Introduction

1.0 Introduction

URS has been retained by General Growth Partners (GGP) to perform a traffic impact study for the proposed expansion of Beachwood Place mall located at 26300 Cedar Road in the City of Beachwood, Ohio. This study investigates the impact of the proposed mall expansion on the surrounding roadway network and provides recommendations to mitigate any traffic impact.

1.1 Site Location

The existing Beachwood Place mall is located in the southeast quadrant of the Cedar Road/Richmond Road intersection, bounded on the south and east by George Zeiger Drive. **Exhibit 1** presents a study location map for this project.

1.2 Proposed Site Development

The planned expansion of Beachwood Place mall will increase the shopping center by 104,000 square feet, bringing the total size to 1,011,648 square feet, including outlots. The expansion includes adding space to the mall proper on the northwest corner, constructing three (3) restaurant outlots and expanding the parking lot westward towards Richmond Road. For the purposes of this study, 2014 is considered the Opening Year. There is no design year consideration for this study.

1.3 Study Scope

This impact study will provide a general analysis of the proposed development for the year 2014. Two analysis scenarios will be presented. These scenarios include the following:

- Year 2014 No-Build Conditions
- Year 2014 Build Conditions

The analysis scenarios will investigate the traffic conditions during the PM peak of the surrounding roadway network on a typical weekday. There is no evaluation of the AM peak since the mall does not open until 10:00 AM, thus having little to no traffic impact during the typical morning peak traffic flow. There also is no evaluation of Saturday traffic. The Institute of Transportation Engineers (ITE) has published data showing that retail centers such as shopping malls typically generate higher traffic volumes on Saturdays than on weekdays, however, the overall traffic on the surrounding roadways is generally substantially lower than on weekdays due to the lack of commuters. The Ohio Department of Transportation (ODOT) and the Federal Highway Administration (FHWA) acknowledge this phenomenon through their project development process. Traffic projections performed by ODOT using travel demand models, such as

those prepared by the Northeast Ohio Areawide Coordinating Agency (NOACA), only are based on weekday travel. Those projections are used to design billions of dollars of transportation improvements every year, with no consideration of Saturday or holiday traffic conditions, because to do so would result in an overdesigned roadway network and an inefficient use of resources.

The study area for this investigation includes the following existing intersections:

- Cedar Road/Richmond Road
- Cedar Road/LaPlace Fashion Centre Drive (unsignalized)
- Cedar Road/Beachwood Place Drive 1
- Cedar Road/George Zeiger Drive
- George Zeiger Drive/Beachwood Place Drive 2
- George Zeiger Drive/Hamptons Apartments
- George Zeiger Drive/Beachwood Place Drive 3
- George Zeiger Drive/Four Seasons Apartments
- George Zeiger Drive/Beachwood Place Drive 4
- George Zeiger Drive/North Village Lane
- Richmond Road/George Zeiger Drive
- Richmond Road/Hilltop Drive (unsignalized)
- Richmond Road/Community Drive (unsignalized)
- Richmond Road/LaPlace Fashion Centre Drive (unsignalized)
- LaPlace Fashion Centre/Beachwood Place parking lot connection

The analysis includes forecasting existing traffic volumes, developing a site traffic trip generation and distributing newly-generated site traffic to the existing roadway network. Analysis will be performed on the roadway network to determine the adequacy of the roadway system to efficiently process the development traffic. Improvements necessary to achieve acceptable levels of service in the study area will be evaluated. In general, level of service (LOS) D or better is considered acceptable in urban areas when development or roadway projects are being evaluated. However, in a built environment such as Beachwood, there may be existing conditions presenting lower levels of service. In that case, as long as the additional traffic does not result in degradation of the existing condition, it will be considered acceptable. The level of service criteria applies to both individual movements and overall intersections.

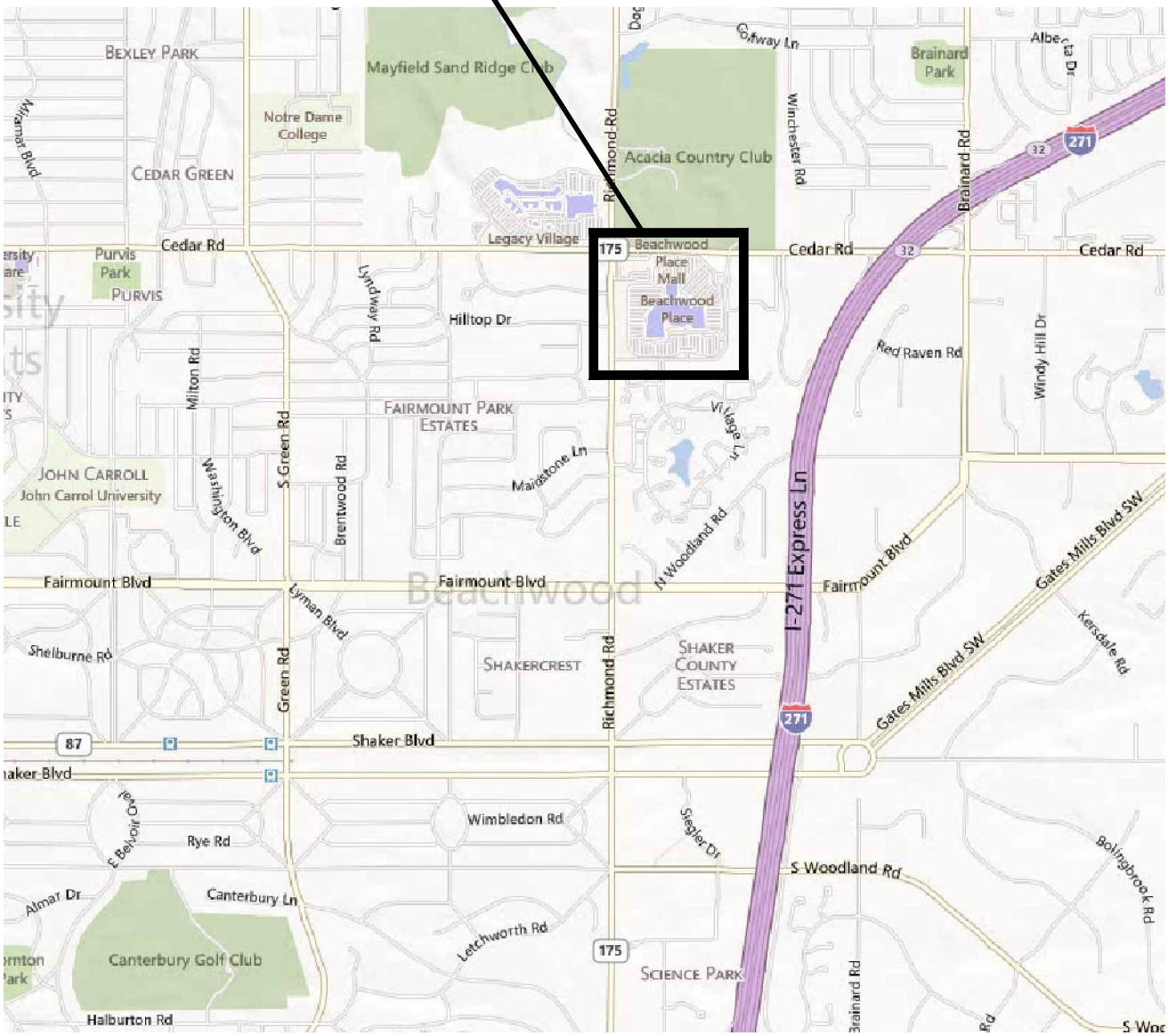

EXHIBIT 1
LOCATION MAP
BEACHWOOD PLACE EXPANSION TIS
BEACHWOOD, OHIO

URS

564 White Pond Drive Akron, Ohio 44320-1100 (330) 836-9111

I:\Projects\17887 - GGP Beachwood\Traffic\Docs\location map.dwg User:kevin_westbrooks Jun 27, 2013 - 11:53am

Section 2
Existing and Planned Roadways

2.0 Existing and Planned Roadways

This section of the report describes the physical characteristics of the roadway system in the vicinity of the proposed development.

2.1 Existing Roadways

Cedar Road is an urban principal arterial, based on ODOT roadway functional classification lists, running east-west through the City of Beachwood and connects several communities including Cleveland, University Heights, Beachwood and Gates Mills. In the study area it is primarily a five-lane road with a speed limit of 35 mph. Retail and commercial development lines the south side of the road, with the former Acacia Country Club on the north side. To the north and south of the study area, there is dense residential development.

Richmond Road (SR 175) is an urban principal arterial, according to ODOT, running north-south through the City of Beachwood, connecting communities such as Solon, Warrensville Heights, Beachwood, Lyndhurst and Richmond Heights. In the study area there are currently residential properties immediately adjacent on both sides of the roadway, with commercial development further east. Richmond Road is primarily a four-lane roadway with a speed limit of 35 mph. There are turn lanes at the intersections with Cedar Road and George Zeiger Drive.

George Zeiger Drive is a local roadway connecting Cedar Road and Richmond Road along the east and south sides of Beachwood Place mall. It provides access not only to the mall but also to several substantial residential complexes. George Zeiger Drive is primarily a four-lane roadway with a posted speed limit of 25 mph.

Section 3
No-Build Traffic Conditions

3.0 No-Build Traffic Conditions

Prior to analyzing projected traffic conditions, it is appropriate to assess existing, or background, traffic operations within the study area. Background traffic in this study is defined as existing and projected traffic volumes without the generated traffic from the proposed mall expansion.

3.1 Existing Traffic Volumes

Nine-hour turning movement traffic counts were performed at the study intersections on June 4-5, 2013, with the exception of the LaPlace Fashion Centre driveways. The intersection counts were performed by an objective third party, Miovision Technologies, using video cameras attached to a signal pole with a view of the entire intersection. Miovision, based out of Ontario, Canada, is a specialist in collecting traffic data using video and web-based technologies, resulting in accurate and timely traffic data collection. The video was then analyzed off-site and compiled into spreadsheets of turning movement counts, including trucks and pedestrians. The actual video images are available for reference. Manual counts at the LaPlace drives on Cedar Road, Richmond Road and the connection to Beachwood Place were conducted only during the PM peak hour, and included only turning movements to and from the shopping plaza.

In addition to deployment of the Miovision traffic count technology, URS deployed three registered professional traffic engineers to the study area during the PM Peak Hour on June 4th to observe and professionally assess traffic conditions on this randomly-chosen typical day. Several observations were made. Intuitively, there was a significant amount of traffic on Cedar Road, which is known to be a heavily-travelled corridor. Richmond Road also carried a good amount of traffic, but conditions were not considered untenable. George Zeiger Drive was observed to be underutilized in terms of traffic volume, with significant excess available capacity. Hilltop Road appeared to accommodate a fair amount of traffic, but nothing outside the norm of a collector road serving such a large residential area. Finally, Community Drive was observed for the entire PM peak hour and very few cars were seen using that roadway, as confirmed in the actual counts.

The raw count data was converted to the PM peak-hour traffic volume scenario for use in assessing the traffic conditions. In establishing the peak-hour traffic volume scenario, system-wide traffic volumes were analyzed to determine the overall peak hour. Therefore, a particular intersection's actual peak hour volume may not correspond exactly with the system peak hour volume presented. The system-wide PM peak hour is 5:00 PM – 6:00 PM. This is the time period that was used to count the LaPlace driveways.

These traffic counts were used as the base condition for the traffic analysis. The existing volumes were projected to the Opening Year (2014) for the proposed

development. A linear growth rate of 1.5% per year was used to project the existing volumes based on historic data and engineering judgment. In actuality, the historical data obtained from ODOT for Richmond Road showed a decrease in traffic from 2007-2010, but a minimal growth rate was applied to be conservative in case trends change in the future. Copies of the ODOT traffic survey reports are included in **Appendix A**.

Exhibit 2 presents the 2014 No-Build PM peak hour volumes. The volumes are balanced between intersections. Copies of the traffic data are provided in **Appendix A**.

NOT TO SCALE

EXHIBIT 2
OPENING DAY PM VOLUMES (NO-BUILD)
BEACHWOOD PLACE EXPANSION TIS
BEACHWOOD, OHIO

URS

564 White Pond Drive Akron, Ohio 44320-1100 (330) 836-9111

I:\Projects\17887 -GGP Beachwood\Traffic\Docs\base_Revised_6-28-13.dwg User:kevin_westbrooks Jul 01, 2013 - 9:51am

3.2 Rating System for Roadway Adequacy

Roadway adequacy in this traffic study refers to the ability of the roads, intersections and traffic control to process traffic demand. In other words, are the roads wide enough, intersections big enough and traffic control adequate to move traffic through the area without excessive delay? This concept is measured through conducting capacity analysis at major intersections or through roadway sections.

The intersection capacity analysis techniques outlined in the Highway Capacity Manual[1] were used to analyze the adequacy of the intersections within the study area. These procedures provide a quantified level of service (LOS), which describes traffic conditions by intersection control delay. These service conditions are defined by the letters "A" through "F", with "A" being excellent (no delay) traffic conditions, and "F" equating to congested, unstable traffic flow with excessive delay. **Exhibit 3** presents a full definition of intersection LOS.

The level of service criteria for **signalized intersections** is defined in terms of control delay, which is a measure of driver discomfort, frustration, fuel consumption, and increased travel time. Control delay includes initial deceleration delay, queue move-up time, stopped delay, and final acceleration delay. The following table presents the level of service criteria for signalized intersections.

Table 3.1 - Level of Service Criteria for Signalized Intersections

Level of Service	Average Control Delay (sec/veh)
A	≤10
B	>10-20
C	>20-35
D	>35-55
E	>55-80
F	>80

The application of LOS criteria for **unsignalized intersections** is similar to that of signalized intersections in that it uses a measure of control delay. However, the thresholds differ due to driver perceptions. The expectation is that a signalized intersection is designed to carry higher traffic volumes and experience greater delay than an unsignalized intersection. The following table presents the level of service criteria for unsignalized intersections.

[3]"Highway Capacity Manual, 2010", Transportation Research Board, National Research Council, Washington, DC.

Table 3.2 - Level of Service Criteria for Unsignalized Intersections

Level of Service	Average Control Delay (sec/veh)
A	0-10
B	>10-15
C	>15-25
D	>25-35
E	>35-50
F	>50

The unsignalized capacity analysis theory is based on gap acceptance models, which quantify the available gaps in traffic for critical turning movements. The LOS therefore, corresponds to the number of available gaps in the major road traffic stream, which in turn reflects the length of delay for the minor movement. No specific LOS is provided for through traffic on the major (non-stop) road, as it is assumed that those vehicles experience a LOS "A". An overall LOS is not provided for the intersection as a whole, as it would misrepresent the LOS's of the minor movements, which could be experiencing long delays. Although individual turning movements at an unsignalized intersection may exhibit an "E" or even "F" LOS, the overall operating condition of the intersection should not always be considered unacceptable. Further, traffic signalization is not necessarily warranted because one or more turning movements at an unsignalized intersection experience an "E" or "F" LOS. Signal warrants primarily are based on traffic volumes flowing through an intersection and safety considerations, as defined in the Ohio Manual of Uniform Traffic Control Devices[2].

3.3 No-Build Intersection Capacity Analysis

The software package Synchro[3] was used to analyze the levels of service for this study. The 2014 PM peak hour volumes were analyzed for the study intersections using existing lane use. The LOS results for the No-Build traffic conditions are summarized in **Exhibit 4**, and capacity analysis worksheets are provided in **Appendix B**.

As the exhibit indicates, there are operating deficiencies at several locations within the study area under No-Build conditions. The intersection of Cedar Road/Richmond Road currently experiences LOS E on the northbound and southbound through movements and LOS F on the eastbound and southbound left-turn movements. The northbound left-turn movement from LaPlace Fashion Centre to Cedar Road operates at LOS E, as does the westbound left-turn movement from LaPlace Fashion Centre to Richmond Road. At Cedar Road/Beachwood Place Drive 1, the northbound left-turn movement is at LOS E under No-Build conditions. The intersection of Cedar Road/George Zeiger Drive

[2] "Ohio Manual of Uniform Traffic Control Devices", 2012 Edition, Ohio Department of Transportation, Office of Traffic Engineering, 2012.
[3] Synchro plus SimTraffic 8, Trafficware, 2011.

shows LOS E for the northbound and westbound left-turn movements. Finally, the westbound left-turn movement at Richmond Road/George Zeiger Drive experiences LOS E. All other movements at study intersections operate at acceptable levels.

LEVEL OF SERVICE DEFINITIONS

L.O.S.	ROADWAY SEGMENTS OR CONTROLLED-ACCESS HIGHWAYS	INTERSECTIONS
A	Free flow, low traffic density.	No vehicle waits longer than one signal indication.
B	Delay is not unreasonable, stable traffic flow.	On a rare occasion, motorists will wait longer than one signal indication.
C	Stable condition, movements somewhat restricted due to higher volumes, but not objectional for motorists.	Intermittently, drivers wait more than one signal indication, and occasionally backups may develop behind left-turning vehicles, traffic flow still stable and acceptable.
D	Movements more restricted, queues and delays may occur during short peaks, but lower demands occur often enough to permit clearing, thus preventing excessive delay.	Delays at intersections may become extensive with some, especially left-turning vehicles, waiting two or more signal indications, enough cycles with lower demand occur to permit periodic clearance, thus preventing excessive backups.
E	Actual capacity of the roadway. Involves delay to all motorists due to congestion.	Very long queues may create lengthy delays, especially for left-turning vehicles.
F	Forced flow with demand volumes greater than capacity resulting in complete congestion. Volumes drop to zero in extreme cases.	Backups from locations downstream restrict or prevent movement of vehicles out of approach, creating a storage area during part or all of an hour.

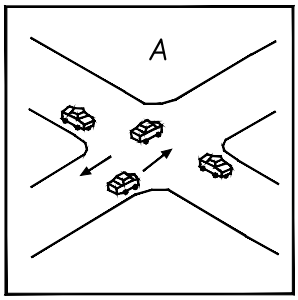

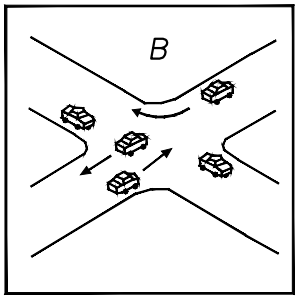

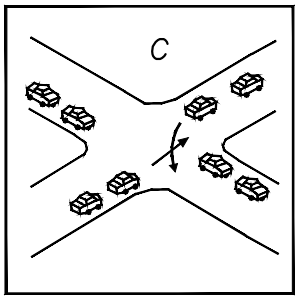

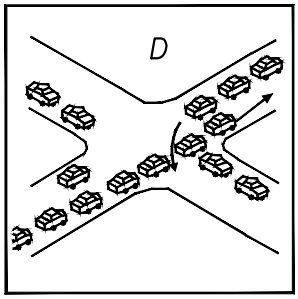

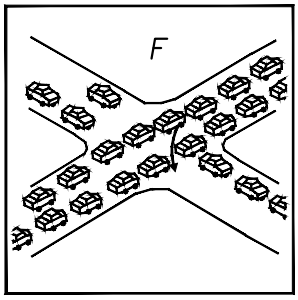

SOURCE: A Policy on Design of Urban Highway and Arterial Streets, 1984 based upon material published in the Highway Capacity Manual, Transportation Research Board.

EXHIBIT 3
LEVEL OF SERVICE DEFINITION
BEACHWOOD PLACE EXPANSION TIS
BEACHWOOD, OHIO

URS
564 White Pond Drive Akron, Ohio 44320-1100 (330) 836-9111

I:\Projects\17887 -GGP Beachwood\Traffic\Docs\LOS.dwg User:kevin_westbrooks Jun 27, 2013 - 10:48am

EXHIBIT 4
OPENING DAY PM PEAK LEVEL OF SERVICE (NO-BUILD)
BEACHWOOD PLACE EXPANSION TIS
BEACHWOOD, OHIO

URS

564 White Pond Drive Akron, Ohio 44320-1100 (330) 836-9111

I:\Projects\17887 -GGP Beachwood\Traffic\Docs\base_Revised_6-28-13.dwg User:kevin_westbrooks Jul 01, 2013 - 9:52am

Section 4
Build Traffic Conditions

4.0 Build Traffic Conditions

An evaluation of anticipated traffic conditions on the surrounding roadway network requires an estimation of future site-generated traffic volumes superimposed onto background (No-Build) traffic volumes. The combined traffic volumes are used to test the adequacy of the roadway network. This chapter presents the methodologies used to determine the anticipated traffic volumes associated with the proposed development.

4.1 Site Traffic Generation and Distribution

Typically, when preparing a traffic impact study for a development such as this, we turn to the trip-generation rates, methodologies and guidelines as outlined in the Institute of Transportation Engineer's (ITE) Trip Generation, 9th Edition[4] manual. This manual is considered the industry standard for traffic engineering, and contains empirical data, rates and equations developed after numerous studies and traffic counts were conducted at similar types of developments throughout the United States.

The proposed expansion of Beachwood Place was evaluated using land use 820 Shopping Center. Since there is an existing facility with the same land use, a comparison was made of the existing mall and the projected mall, based on anticipated trips per 1,000 square feet of building. The data from ITE considers a shopping center to include both the mall itself and all outlots, therefore separate traffic is not generated for the restaurants. Since many people will drive once to the mall and then eat at one of the restaurants, and since the data in ITE evaluates the number of trips accessing the mall driveways, to generate traffic separately for the proposed restaurants would overestimate the amount of anticipated trips. The following table presents the PM peak hour trips for the existing and proposed developments. As indicated, the mall expansion is projected to generate an additional 198 trips.

Table 4.1 – Trip Generation

Development	Size	ITE Code	PM Peak	
			Enter	Exit
Existing Beachwood Place	898,648 S.F.	820	1252	1357
Proposed Beachwood Place	1,002,648 S.F.	820	1347	1460
Anticipated New Trips			95	103

In addition to some traffic traveling between the mall and its outlots (capture traffic), another phenomenon related to many retail land uses involves what is known as pass-by traffic. This involves people stopping at the mall while en route from their origin to a primary destination, for example someone stopping to

[4] "Trip Generation, 9th Edition", Institute of Transportation Engineers, 2013.

shop on their way home from work. Since they would be on the roadway regardless, their trip to the mall is not an additional trip on the roadway network, but simply an additional trip at the mall driveway. There are methods for calculating pass-by traffic percentages contained in the ITE manuals, but they were not applied for this case for a variety of reasons. First, the anticipated new trips due to the expansion are low in comparison to the overall mall traffic and the traffic on the surrounding roadways. Secondly, by applying pass-by traffic, these trips would be lowered even further, so by ignoring the effects of pass-by traffic, a worst case scenario was evaluated. Finally, pass-by trips to a high-end retail mall are less common than those to a land use such as a grocery store or gas station.

Trip distribution patterns for the site-generated traffic volumes were developed based on existing traffic data for the influence area. Utilization of existing traffic patterns for distribution of the new trips is appropriate here as the new trips are an extension of existing trips. In general, Cedar Road carries approximately two-thirds of the mall traffic, while Richmond Road carries the other third. However, the section of Richmond Road between Cedar Road and George Zeiger Drive only caries about 10 percent, since there is no direct entrance point to the mall from Richmond Road. The mall entrance from Cedar Road processes about one-third of the site traffic, with the drives along George Zeiger Drive accommodating the other two-thirds. **Exhibit 5** presents the site traffic distribution patterns for the development and the site generated traffic is shown on **Exhibit 6**.

4.2 Combined Traffic Volumes

The site generated trips were then superimposed onto Opening Day background traffic. **Exhibit 7** presents the total Build peak hour traffic volumes for Year 2014.

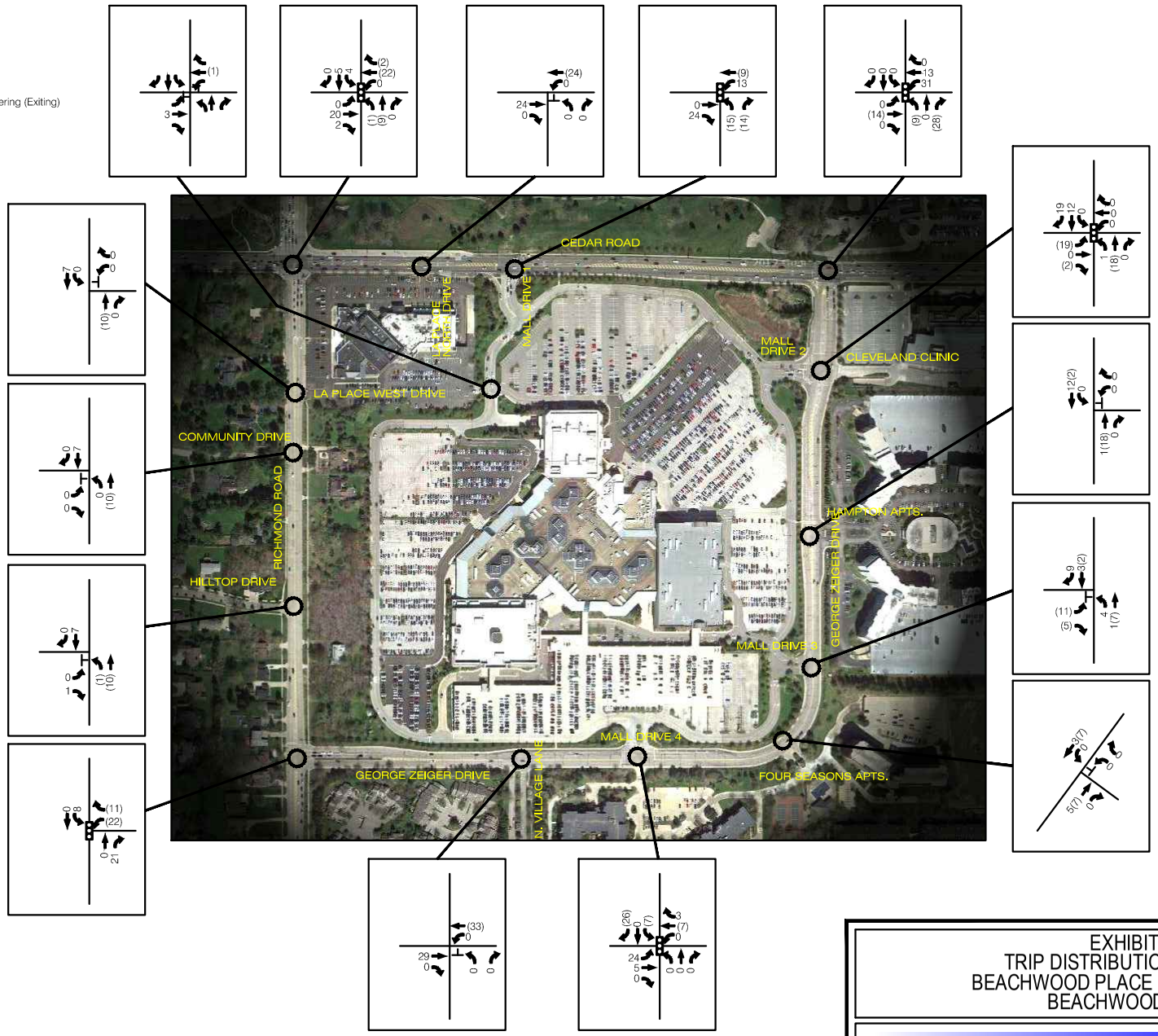

NOT TO SCALE

EXHIBIT 5
TRIP DISTRIBUTION PATTERN
BEACHWOOD PLACE EXPANSION TIS
BEACHWOOD, OHIO

URS

564 White Pond Drive Akron, Ohio 44320-1100 (330) 836-9111

I:\Projects\17887 -GGP Beachwood\Traffic\Docs\base_Revised_6-28-13.dwg User:kevin_westbrooks Jul 01, 2013 - 9:52am

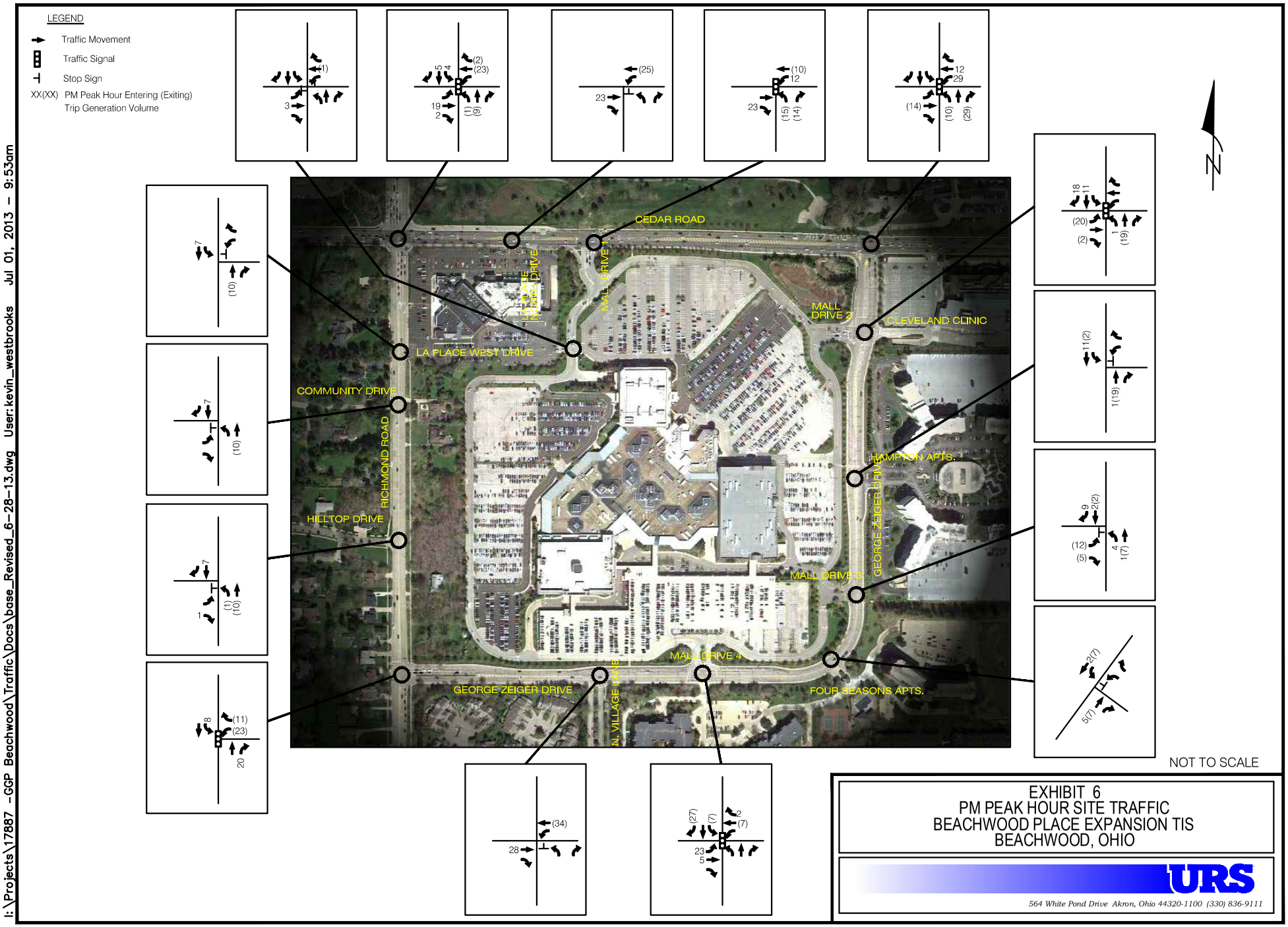

EXHIBIT 6
PM PEAK HOUR SITE TRAFFIC
BEACHWOOD PLACE EXPANSION TIS
BEACHWOOD, OHIO

URS

564 White Pond Drive Akron, Ohio 44320-1100 (330) 836-9111

I:\Projects\17887 -GGP Beachwood\Traffic\Docs\base_Revised_6-28-13.dwg User:kevin_westbrooks Jul 01, 2013 - 9:53am

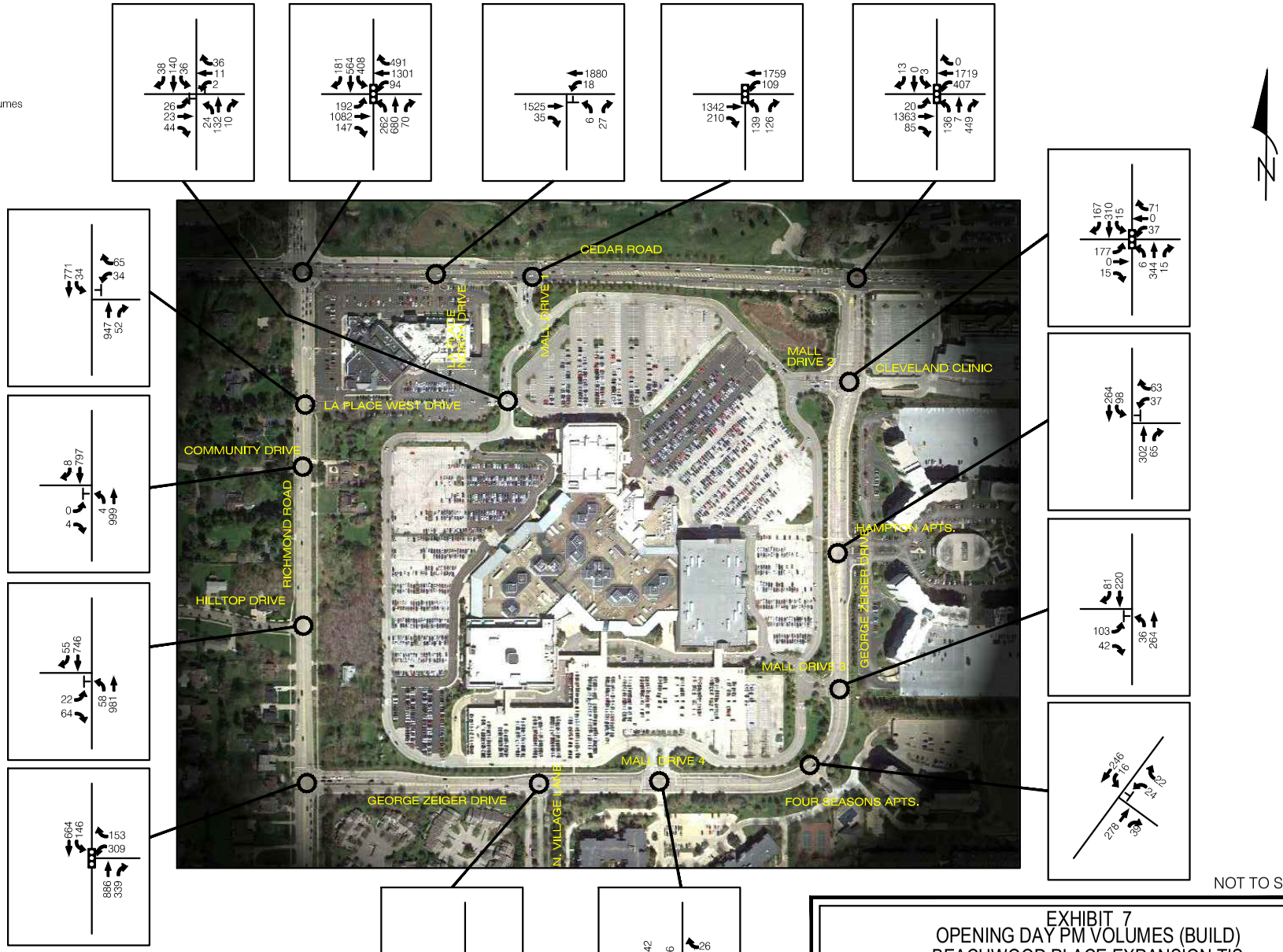

EXHIBIT 7
OPENING DAY PM VOLUMES (BUILD)
BEACHWOOD PLACE EXPANSION TIS
BEACHWOOD, OHIO

URS

564 White Pond Drive Akron, Ohio 44320-1100 (330) 836-9111

I:\Projects\17887 -GGP Beachwood\Traffic\Docs\base_Revised_6-28-13.dwg User:kevin_westbrooks Jul 01, 2013 - 9:53am

4.3 Build Intersection Capacity Analysis

The study intersections were analyzed with the combined peak hour volumes and existing lane use. In a few cases, the existing signal timing was adjusted slightly to accommodate changes in turning volumes, but the overall splits between main street and side street phases were maintained, as were the overall cycle lengths. The analysis indicates that there is no expected degradation due to the expansion of Beachwood Place. There is a minor change in LOS at the Cedar Road/George Zeiger Drive intersection, where the overall intersection drops from LOS B to LOS C and the westbound approach drops from LOS B to LOS C. Since this is within acceptable levels, this is not considered degradation. Capacity analysis worksheets are provided in **Appendix C** and the results of the analysis are shown on **Exhibit 8**.

EXHIBIT 8
OPENING DAY PM PEAK LEVEL OF SERVICE (BUILD)
BEACHWOOD PLACE EXPANSION TIS
BEACHWOOD, OHIO

URS

564 White Pond Drive Akron, Ohio 44320-1100 (330) 836-9111

I:\Projects\17887 -GGP Beachwood\Traffic\Docs\base_Revised_6-28-13.dwg User:kevin_westbrooks Jul 01, 2013 - 9:54am

Section 5
Recommendations and Conclusions

5.0 Recommendations and Conclusions

A traffic impact study was performed for the proposed expansion of Beachwood Place mall located at 26300 Cedar Road in the City of Beachwood. The planned expansion will consist of 104,000 additional square feet of gross floor area, including three (3) restaurant outlots. The parking lot will also be expanded to the west. The Opening Day is considered to be year 2014.

The anticipated additional trips were calculated using the ITE Trip Generation manual. Based on the difference between the existing mall and the proposed mall, an additional 95 vehicles are expected to enter Beachwood Place during the PM peak hour, with an additional 103 vehicles expected to exit the mall during that time period.

The capacity analysis under the No-Build scenario with existing geometry and traffic control was performed and the results indicate there are several deficiencies under No-Build conditions. There is no degradation from No-Build to Build conditions due to the expansion of Beachwood Place. Since the operating deficiencies are not a result of the proposed expansion, there are no countermeasures needed to mitigate traffic impacts.

Preliminary site plans for this expansion project initially considered a new mall access drive onto Richmond Road between Hilltop Drive and Community Drive in anticipation that insufficient roadway access existed to accommodate the additional site-generated traffic. However, once traffic analyses were conducted, it became evident that the existing roadways could, in fact, accommodate the expansion traffic. As such, no additional mall access points are recommended at this time. While there will be a slight increase in traffic dispersed about the roadway network, it is unlikely that such an increase will be perceptible to the travelling public or community as a whole. For example, it is anticipated that there will be an additional 17 cars on Richmond Road between Cedar Road and George Zeiger Drive, an increase of one percent. Fifty, or so, additional cars are anticipated to be on Cedar Road, which also represents an increase of just over one percent. This minor increase in traffic does not warrant any roadway or access improvements and can be absorbed by the current roadway system.

Appendix A
Traffic Counts

15-Minute Count Data

Beachwood Place Drive 1 and Cedar Road

Beachwood, Ohio

URS
564 White Pond Drive
Akron, OH 44320-1100
Tel: 330.836.9111
Fax: 330.836.9115

Seasonal Factor	Day of Week	Date	Start Time	End Time	Weather
0.944	Wednesday	June 5, 2013	7:00 AM	10:00 AM	
0.944	Wednesday	June 5, 2013	11:00 AM	2:00 PM	
0.944	Wednesday	June 5, 2013	3:00 PM	6:00 PM	

Roadway Classification:

ADT Factor: 1.71
Intersection ID: 34

Start Time	Beachwood Place Drive 1 Northbound				Southbound				Total North South	Cedar Road Eastbound				Cedar Road Westbound				Total East West	Total All Dir.
	LT	THRU	RT	Truck	LT	THRU	RT	Truck		LT	THRU	RT	Truck	LT	THRU	RT	Truck		
Totals	732	0	669	11	0	0	0	0	1401	0	11486	1205	312	827	11886	0	315	25404	26805
	Percent Trucks =			1%	Percent Trucks =			0%		Percent Trucks =			2%	Percent Trucks =			2%		
ADT	1179	0	1078	18	0	0	0	0	2257	0	18503	1941	503	1332	19147	0	507	40924	43181
7:00 AM	1	0	4	0	0	0	0	0	5	0	296	5	3	9	241	0	7	551	556
7:15 AM	1	0	6	0	0	0	0	0	7	0	391	4	6	8	322	0	8	725	732
7:30 AM	1	0	4	0	0	0	0	0	5	0	440	7	10	4	317	0	7	768	773
7:45 AM	0	0	7	1	0	0	0	0	7	0	418	16	5	17	342	0	11	793	800
8:00 AM	1	0	6	0	0	0	0	0	7	0	401	5	7	25	343	0	17	774	781
8:15 AM	0	0	3	0	0	0	0	0	3	0	341	5	4	12	310	0	14	668	671
8:30 AM	2	0	5	0	0	0	0	0	7	0	363	8	12	12	285	0	19	668	675
8:45 AM	1	0	2	0	0	0	0	0	3	0	352	12	6	27	326	0	11	717	720
9:00 AM	5	0	13	1	0	0	0	0	18	0	300	14	8	17	304	0	12	635	653
9:15 AM	2	0	5	0	0	0	0	0	7	0	238	24	7	18	253	0	6	533	540
9:30 AM	5	0	7	0	0	0	0	0	12	0	261	17	13	22	304	0	10	604	616
9:45 AM	5	0	13	1	0	0	0	0	18	0	253	31	10	29	278	0	16	591	609
11:00 AM	15	0	13	1	0	0	0	0	28	0	266	34	3	28	283	0	16	611	639
11:15 AM	21	0	15	0	0	0	0	0	36	0	228	36	8	23	314	0	10	601	637
11:30 AM	22	0	21	1	0	0	0	0	43	0	269	40	21	25	308	0	5	642	685
11:45 AM	24	0	18	0	0	0	0	0	42	0	262	55	10	26	344	0	14	687	729
12:00 PM	24	0	19	0	0	0	0	0	43	0	237	45	6	24	358	0	13	664	707
12:15 PM	31	0	21	0	0	0	0	0	52	0	269	40	11	39	368	0	10	716	768
12:30 PM	29	0	18	0	0	0	0	0	47	0	287	45	11	47	306	0	6	685	732
12:45 PM	17	0	33	1	0	0	0	0	50	0	318	48	11	47	309	0	16	722	772
1:00 PM	30	0	22	0	0	0	0	0	52	0	277	55	7	27	294	0	6	653	705
1:15 PM	36	0	32	0	0	0	0	0	68	0	300	48	15	21	287	0	12	656	724
1:30 PM	34	0	20	0	0	0	0	0	54	0	318	62	10	20	280	0	6	680	734
1:45 PM	29	0	15	0	0	0	0	0	44	0	282	51	5	21	269	0	7	623	667
3:00 PM	38	0	31	0	0	0	0	0	69	0	332	38	14	25	314	0	1	709	778
3:15 PM	36	0	36	2	0	0	0	0	72	0	360	44	8	25	389	0	14	818	890
3:30 PM	33	0	32	0	0	0	0	0	65	0	327	33	15	24	353	0	8	737	802
3:45 PM	26	0	25	0	0	0	0	0	51	0	314	43	8	16	357	0	4	730	781
4:00 PM	50	0	25	0	0	0	0	0	75	0	385	33	20	26	331	0	4	775	850
4:15 PM	22	0	30	1	0	0	0	0	52	0	334	37	11	19	354	0	3	744	796
4:30 PM	42	0	27	0	0	0	0	0	69	0	363	41	7	30	369	0	6	803	872
4:45 PM	25	0	29	0	0	0	0	0	54	0	369	42	3	17	409	0	2	837	891
5:00 PM	25	0	28	1	0	0	0	0	53	0	355	40	5	24	422	0	3	841	894
5:15 PM	33	0	36	1	0	0	0	0	69	0	334	52	4	23	417	0	3	826	895
5:30 PM	36	0	31	0	0	0	0	0	67	0	318	46	3	26	421	0	3	811	878
5:45 PM	30	0	17	0	0	0	0	0	47	0	328	49	5	24	405	0	5	806	853

AM Peak Hour
7:30 AM to 8:30 AM

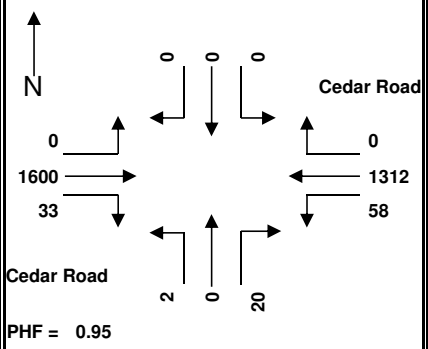

PHF = 0.95
Beachwood Place Drive 1

Midday Peak Hour
12:00 PM to 1:00 PM

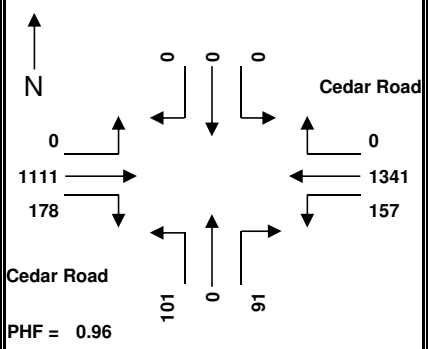

PHF = 0.96
Beachwood Place Drive 1

PM Peak Hour
5:00 PM to 6:00 PM

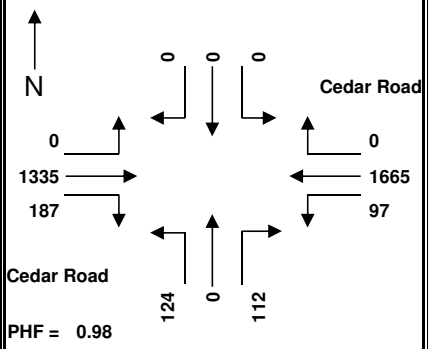

PHF = 0.98
Beachwood Place Drive 1

Notes:

15-Minute Count Data

Drive and George Zeiger Drive and Cedar Road

Beachwood, Ohio

URS
564 White Pond Drive
Akron, OH 44320-1100
Tel: 330.836.9111
Fax: 330.836.9115

Seasonal Factor	Day of Week	Date	Start Time	End Time	Weather
0.921	Tuesday	June 4, 2013	7:00 AM	10:00 AM	
0.921	Tuesday	June 4, 2013	11:00 AM	2:00 PM	
0.921	Tuesday	June 4, 2013	3:00 PM	6:00 PM	

Roadway Classification:

ADT Factor: 1.70
Intersection ID: 34

Start Time	George Zeiger Drive Northbound				Drive Southbound				Total North South	Cedar Road Eastbound				Cedar Road Westbound				Total East West	Total All Dir.
	LT	THRU	RT	Truck	LT	THRU	RT	Truck		LT	THRU	RT	Truck	LT	THRU	RT	Truck		
Totals	852	25	2935	0	17	10	102	0	3941	108	11181	539	0	2869	11537	2	0	26236	30177
	Percent Trucks =			0%	Percent Trucks =			0%		Percent Trucks =			0%	Percent Trucks =			0%		
ADT	1335	39	4597	0	27	16	160	0	6173	169	17513	844	0	4494	18071	3	0	41094	47267
7:00 AM	3	0	45	0	0	0	0	0	48	2	297	13	0	63	238	0	0	613	661
7:15 AM	9	0	52	0	0	0	0	0	61	1	388	14	0	36	285	0	0	724	785
7:30 AM	15	0	78	0	0	0	1	0	94	0	413	15	0	60	330	0	0	818	912
7:45 AM	17	0	58	0	0	0	1	0	76	2	391	19	0	47	315	0	0	774	850
8:00 AM	11	0	60	0	0	0	0	0	71	5	383	11	0	39	318	0	0	756	827
8:15 AM	12	0	56	0	0	0	2	0	70	0	395	9	0	48	296	0	0	748	818
8:30 AM	18	0	70	0	0	0	0	0	88	2	345	11	0	59	331	0	0	748	836
8:45 AM	16	0	46	0	0	0	4	0	66	2	359	12	0	63	313	0	0	749	815
9:00 AM	26	0	40	0	0	0	7	0	73	1	301	11	0	62	284	0	0	659	732
9:15 AM	16	0	53	0	1	0	2	0	72	1	258	12	0	45	283	0	0	599	671
9:30 AM	19	1	37	0	1	0	0	0	58	3	243	13	0	60	296	1	0	616	674
9:45 AM	18	0	43	0	0	0	2	0	63	5	211	13	0	97	238	0	0	564	627
11:00 AM	18	2	48	0	2	1	2	0	73	2	208	16	0	87	240	0	0	553	626
11:15 AM	23	2	74	0	2	2	2	0	105	2	241	11	0	77	281	0	0	612	717
11:30 AM	30	0	81	0	0	1	6	0	118	7	232	16	0	91	270	0	0	616	734
11:45 AM	27	0	77	0	0	1	3	0	108	1	219	13	0	94	335	0	0	662	770
12:00 PM	30	0	71	0	1	0	4	0	106	2	231	15	0	94	290	0	0	632	738
12:15 PM	27	0	105	0	0	0	7	0	139	2	252	14	0	93	302	0	0	663	802
12:30 PM	28	3	92	0	0	0	1	0	124	2	293	22	0	86	310	0	0	713	837
12:45 PM	19	2	87	0	0	1	5	0	114	7	296	20	0	114	319	0	0	756	870
1:00 PM	27	0	103	0	1	0	3	0	134	0	299	14	0	100	247	1	0	661	795
1:15 PM	15	2	85	0	0	3	6	0	111	5	316	18	0	91	285	0	0	715	826
1:30 PM	24	3	100	0	0	0	3	0	130	2	289	20	0	79	256	0	0	646	776
1:45 PM	20	0	106	0	0	0	3	0	129	5	311	18	0	84	281	0	0	699	828
3:00 PM	39	2	126	0	1	0	2	0	170	7	322	15	0	87	330	0	0	761	931
3:15 PM	25	0	82	0	0	0	2	0	109	1	342	21	0	85	322	0	0	771	880
3:30 PM	34	0	118	0	3	0	2	0	157	2	330	12	0	82	347	0	0	773	930
3:45 PM	29	0	101	0	0	0	3	0	133	4	361	17	0	101	352	0	0	835	968
4:00 PM	35	1	125	0	1	0	2	0	164	2	360	15	0	95	328	0	0	800	964
4:15 PM	28	0	88	0	1	0	4	0	121	1	350	15	0	94	417	0	0	877	998
4:30 PM	47	0	121	0	0	1	4	0	173	3	342	7	0	80	390	0	0	822	995
4:45 PM	21	0	89	0	0	0	6	0	116	7	304	15	0	98	426	0	0	850	966
5:00 PM	42	1	121	0	0	0	5	0	169	1	327	20	0	85	370	0	0	803	972
5:15 PM	28	1	102	0	0	0	2	0	133	6	320	22	0	101	455	0	0	904	1037
5:30 PM	31	2	110	0	2	0	2	0	147	6	338	13	0	88	437	0	0	882	1029
5:45 PM	25	3	85	0	1	0	4	0	118	7	314	17	0	104	420	0	0	862	980

AM Peak Hour

7:30 AM to 8:30 AM

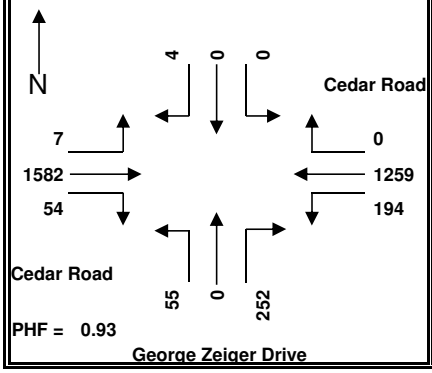

Midday Peak Hour

12:00 PM to 1:00 PM

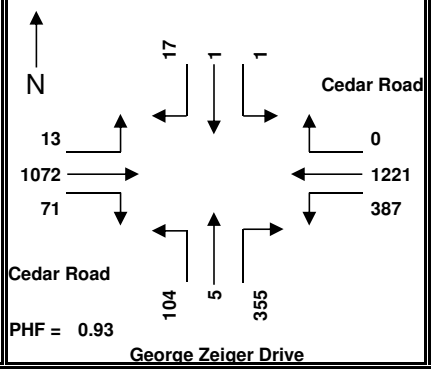

PM Peak Hour

5:00 PM to 6:00 PM

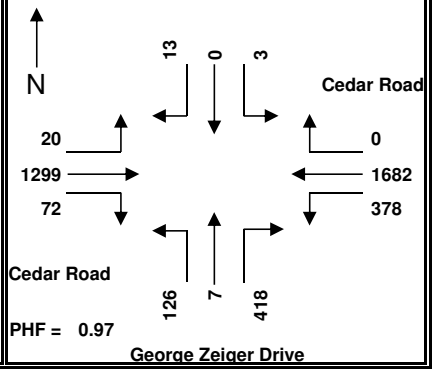

Notes:

15-Minute Count Data

George Zeiger and Beachwood Drive 2 and Cleveland Clinic

Beachwood, Ohio

URS
564 White Pond Drive
Akron, OH 44320-1100
Tel: 330.836.9111
Fax: 330.836.9115

Seasonal Factor	Day of Week	Date	Start Time	End Time	Weather
0.954	Tuesday	June 4, 2013	7:00 AM	10:00 AM	
0.954	Tuesday	June 4, 2013	11:00 AM	2:00 PM	
0.954	Tuesday	June 4, 2013	3:00 PM	6:00 PM	

Roadway Classification:

ADT Factor: 1.71
Intersection ID: 34

Start Time	George Zeiger Northbound				George Zeiger Southbound				Total North South	Beachwood Drive 2 Eastbound				Cleveland Clinic Westbound				Total East West	Total All Dir.
	LT	THRU	RT	Truck	LT	THRU	RT	Truck		LT	THRU	RT	Truck	LT	THRU	RT	Truck		
Totals	70	2581	321	108	473	1910	1164	110	6519	884	31	89	16	266	51	535	8	1856	8375
	Percent Trucks =			4%	Percent Trucks =			3%		Percent Trucks =			2%	Percent Trucks =			1%		
ADT	114	4202	523	176	770	3109	1895	179	10613	1439	50	145	26	433	83	871	13	3022	13634
7:00 AM	0	52	6	1	18	57	3	0	136	1	0	0	0	3	0	1	0	5	141
7:15 AM	2	65	11	1	29	24	2	3	133	0	0	1	0	1	0	0	0	2	135
7:30 AM	1	86	13	2	35	30	4	1	169	0	2	1	0	1	0	4	0	8	177
7:45 AM	1	69	21	1	39	26	4	0	160	2	1	1	1	4	0	11	0	19	179
8:00 AM	1	64	19	0	18	33	3	5	138	0	0	1	0	3	0	3	0	7	145
8:15 AM	2	65	20	1	21	35	6	5	149	0	0	1	0	9	0	11	1	21	170
8:30 AM	1	67	11	3	24	36	8	0	147	0	0	0	0	5	0	14	0	19	166
8:45 AM	1	47	11	3	16	50	17	5	142	3	0	1	0	5	0	20	0	29	171
9:00 AM	1	57	7	1	13	56	11	3	145	3	2	0	0	8	0	10	0	23	168
9:15 AM	0	57	13	3	12	33	11	5	126	5	0	0	0	9	1	14	0	29	155
9:30 AM	2	46	7	6	9	35	33	2	132	5	2	0	1	6	1	12	0	26	158
9:45 AM	0	56	10	4	18	55	44	5	183	7	0	1	0	9	0	17	0	34	217
11:00 AM	2	43	7	2	18	45	39	2	154	21	1	5	1	11	5	13	0	56	210
11:15 AM	3	65	7	3	8	44	47	4	174	22	0	3	0	9	3	14	0	51	225
11:30 AM	3	68	7	6	4	63	49	6	194	31	2	1	0	9	2	22	0	67	261
11:45 AM	6	70	9	7	9	58	40	10	192	33	2	1	2	6	1	16	1	59	251
12:00 PM	2	59	6	5	5	56	61	5	189	30	1	0	0	14	5	17	0	67	256
12:15 PM	2	84	7	3	10	52	39	4	194	34	2	3	0	6	2	16	0	63	257
12:30 PM	2	68	7	4	11	66	39	5	193	38	2	4	1	6	1	12	1	63	256
12:45 PM	6	74	10	5	18	76	48	5	232	42	2	4	1	6	2	11	1	67	299
1:00 PM	4	74	16	5	16	53	47	4	210	33	0	3	1	5	1	11	1	53	263
1:15 PM	1	78	6	4	13	56	41	4	195	33	1	2	1	2	1	9	1	48	243
1:30 PM	1	74	14	2	19	42	48	2	198	43	3	1	1	7	2	8	0	64	262
1:45 PM	1	87	8	7	12	50	34	3	192	37	5	5	2	9	2	17	0	75	267
3:00 PM	2	104	10	5	14	64	37	3	231	50	0	4	1	13	6	21	0	94	325
3:15 PM	2	88	6	1	7	59	36	6	198	26	0	3	1	8	0	13	2	50	248
3:30 PM	0	84	10	5	7	61	46	3	208	36	0	2	0	13	2	21	0	74	282
3:45 PM	3	87	8	3	14	52	36	3	200	39	0	11	0	4	0	20	0	74	274
4:00 PM	4	104	8	6	9	70	52	2	247	30	0	6	0	7	2	24	0	69	316
4:15 PM	1	85	3	4	6	57	38	1	190	41	2	2	2	10	0	29	0	84	274
4:30 PM	4	79	3	1	2	43	43	0	174	35	0	4	0	15	4	36	0	94	268
4:45 PM	4	65	5	2	4	62	49	1	189	47	1	5	0	6	4	17	0	80	269
5:00 PM	1	91	6	0	5	78	38	0	219	34	0	3	0	11	1	31	0	80	299
5:15 PM	0	75	3	1	6	78	38	2	200	45	0	5	0	13	1	19	0	83	283
5:30 PM	1	74	4	1	2	79	34	1	194	41	0	2	0	10	1	11	0	65	259
5:45 PM	3	70	2	0	2	76	39	0	192	37	0	3	0	3	1	10	0	54	246

AM Peak Hour

7:30 AM to 8:30 AM

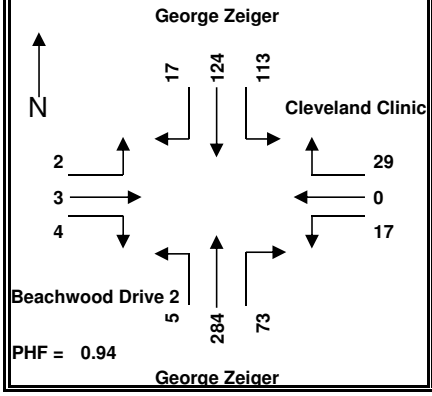

Midday Peak Hour

12:00 PM to 1:00 PM

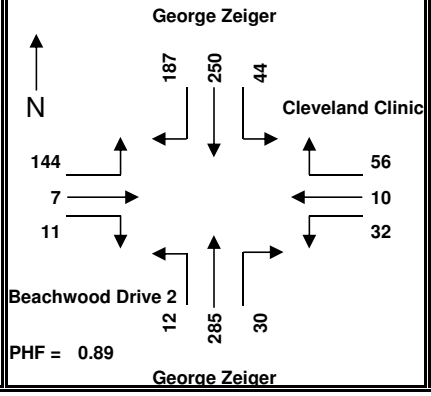

PM Peak Hour

5:00 PM to 6:00 PM

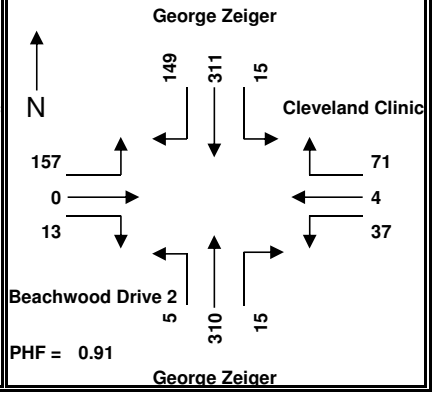

Notes:

15-Minute Count Data

George Zeiger Drive and Hampton Apartments

Beachwood, Ohio

URS
564 White Pond Drive
Akron, OH 44320-1100
Tel: 330.836.9111
Fax: 330.836.9115

Seasonal Factor	Day of Week	Date	Start Time	End Time	Weather
0.954	Tuesday	June 4, 2013	7:00 AM	10:00 AM	
0.954	Tuesday	June 4, 2013	11:00 AM	2:00 PM	
0.954	Tuesday	June 4, 2013	3:00 PM	6:00 PM	

Roadway Classification:

ADT Factor: 1.71
Intersection ID: 34

Start Time	George Zeiger Drive Northbound				George Zeiger Drive Southbound				Total North South	Eastbound				Hampton Apartments Westbound				Total East West	Total All Dir.
	LT	THRU	RT	Truck	LT	THRU	RT	Truck		LT	THRU	RT	Truck	LT	THRU	RT	Truck		
Totals	0	2286	298	107	587	1658	0	91	4829	0	0	0	0	344	0	683	20	1027	5856
	Percent Trucks =			4%	Percent Trucks =			4%		Percent Trucks =			0%	Percent Trucks =			2%		
ADT	0	3722	485	174	956	2699	0	148	7862	0	0	0	0	560	0	1112	33	1672	9533
7:00 AM	0	43	3	1	38	18	0	0	102	0	0	0	0	9	0	19	0	28	130
7:15 AM	0	58	4	1	14	16	0	3	92	0	0	0	0	14	0	23	0	37	129
7:30 AM	0	63	5	2	12	18	0	1	98	0	0	0	0	27	0	34	0	61	159
7:45 AM	0	65	13	1	11	21	0	0	110	0	0	0	0	15	0	23	0	38	148
8:00 AM	0	72	8	0	11	17	0	2	108	0	0	0	0	10	0	25	0	35	143
8:15 AM	0	71	4	1	18	29	0	5	122	0	0	0	0	10	0	25	0	35	157
8:30 AM	0	52	4	3	9	33	0	0	98	0	0	0	0	12	0	33	0	45	143
8:45 AM	0	50	6	2	20	40	0	4	116	0	0	0	0	7	0	11	0	18	134
9:00 AM	0	36	3	1	16	43	0	2	98	0	0	0	0	9	0	23	0	32	130
9:15 AM	0	43	9	3	13	34	0	3	99	0	0	0	0	14	0	18	0	32	131
9:30 AM	0	39	8	4	10	32	0	1	89	0	0	0	0	6	0	12	0	18	107
9:45 AM	0	45	4	6	8	50	0	3	107	0	0	0	0	8	0	10	0	18	125
11:00 AM	0	42	2	2	13	44	0	2	101	0	0	0	0	9	0	11	0	20	121
11:15 AM	0	57	2	3	10	49	0	6	118	0	0	0	0	7	0	16	1	23	141
11:30 AM	0	57	7	6	20	55	0	5	139	0	0	0	0	11	0	18	2	29	168
11:45 AM	0	67	8	6	17	40	0	2	132	0	0	0	0	8	0	19	3	27	159
12:00 PM	0	55	5	6	12	64	0	4	136	0	0	0	0	5	0	15	1	20	156
12:15 PM	0	71	7	4	11	48	0	4	137	0	0	0	0	10	0	18	1	28	165
12:30 PM	0	68	7	6	17	61	0	4	153	0	0	0	0	9	0	13	3	22	175
12:45 PM	0	76	10	4	22	56	0	3	164	0	0	0	0	12	0	13	3	25	189
1:00 PM	0	72	7	1	18	43	0	5	140	0	0	0	0	6	0	12	0	18	158
1:15 PM	0	70	5	8	15	56	0	3	146	0	0	0	0	6	0	19	1	25	171
1:30 PM	0	76	6	2	9	40	0	2	131	0	0	0	0	4	0	14	0	18	149
1:45 PM	0	87	9	5	17	51	0	5	164	0	0	0	0	9	0	16	2	25	189
3:00 PM	0	75	11	5	17	53	0	3	156	0	0	0	0	12	0	36	0	48	204
3:15 PM	0	68	14	3	13	60	0	5	155	0	0	0	0	12	0	26	0	38	193
3:30 PM	0	71	12	3	17	52	0	3	152	0	0	0	0	5	0	25	1	30	182
3:45 PM	0	79	9	3	22	55	0	3	165	0	0	0	0	11	0	19	1	30	195
4:00 PM	0	94	12	5	18	60	0	2	184	0	0	0	0	3	0	21	0	24	208
4:15 PM	0	80	14	5	11	62	0	2	167	0	0	0	0	4	0	11	0	15	182
4:30 PM	0	63	7	1	9	55	0	0	134	0	0	0	0	10	0	21	0	31	165
4:45 PM	0	53	8	1	21	52	0	1	134	0	0	0	0	13	0	21	1	34	168
5:00 PM	0	77	10	1	20	58	0	0	165	0	0	0	0	11	0	19	0	30	195
5:15 PM	0	58	15	0	30	77	0	2	180	0	0	0	0	8	0	19	0	27	207
5:30 PM	0	72	21	1	19	61	0	1	173	0	0	0	0	10	0	14	0	24	197
5:45 PM	0	61	19	1	29	55	0	0	164	0	0	0	0	8	0	11	0	19	183

AM Peak Hour

7:30 AM to 8:30 AM

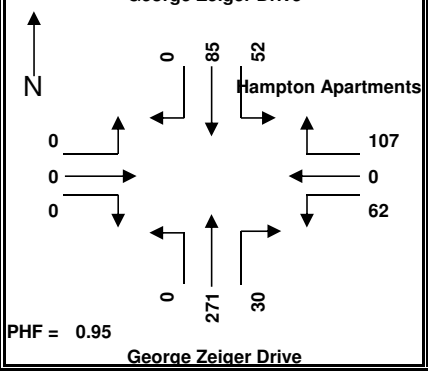

Midday Peak Hour

12:00 PM to 1:00 PM

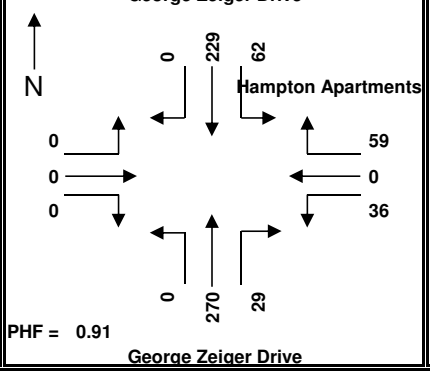

PM Peak Hour

5:00 PM to 6:00 PM

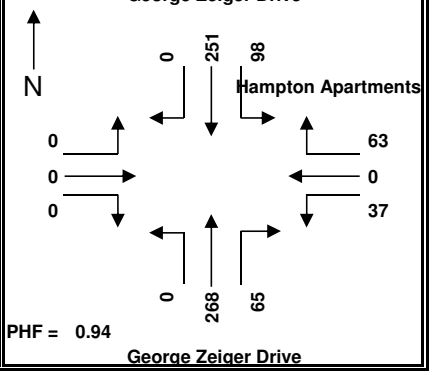

Notes:

15-Minute Count Data

George Zeiger Drive and Beachwood Place Drive 3

Beachwood, Ohio

URS
564 White Pond Drive
Akron, OH 44320-1100
Tel: 330.836.9111
Fax: 330.836.9115

Seasonal Factor	Day of Week	Date	Start Time	End Time	Weather
0.954	Tuesday	June 4, 2013	7:00 AM	10:00 AM	
0.954	Tuesday	June 4, 2013	11:00 AM	2:00 PM	
0.954	Tuesday	June 4, 2013	3:00 PM	6:00 PM	

Roadway Classification:

ADT Factor: 1.71
Intersection ID: 34

Start	George Zeiger Drive Northbound				George Zeiger Drive Southbound				Total North	Beachwood Place Drive 3 Eastbound				Westbound				Total East	Total All
Time	LT	THRU	RT	Truck	LT	THRU	RT	Truck	South	LT	THRU	RT	Truck	LT	THRU	RT	Truck	West	Dir.
Totals	147	2129	0	95	0	1432	565	86	4273	459	0	181	13	0	0	0	0	640	4913
	Percent Trucks =			4%	Percent Trucks =			4%		Percent Trucks =			2%	Percent Trucks =			0%		
ADT	239	3466	0	155	0	2331	920	140	6956	747	0	295	21	0	0	0	0	1042	7998
7:00 AM	1	46	0	1	0	23	3	0	73	0	0	0	0	0	0	0	0	0	73
7:15 AM	0	61	0	1	0	27	3	2	91	1	0	0	0	0	0	0	0	1	92
7:30 AM	1	64	0	2	0	40	5	2	110	4	0	1	0	0	0	0	0	5	115
7:45 AM	2	75	0	1	0	35	3	0	115	3	0	2	0	0	0	0	0	5	120
8:00 AM	1	68	0	0	0	25	2	2	96	2	0	0	0	0	0	0	0	2	98
8:15 AM	4	76	0	1	0	36	5	6	121	1	0	1	0	0	0	0	0	2	123
8:30 AM	1	59	0	3	0	33	10	0	103	2	0	2	2	0	0	0	0	4	107
8:45 AM	1	59	0	2	0	39	9	5	108	1	0	1	0	0	0	0	0	2	110
9:00 AM	0	37	0	1	0	37	14	1	88	1	0	1	0	0	0	0	0	2	90
9:15 AM	1	50	0	3	0	46	3	5	100	1	0	4	0	0	0	0	0	5	105
9:30 AM	6	47	0	4	0	28	9	1	90	2	0	0	0	0	0	0	0	2	92
9:45 AM	7	47	0	6	0	34	26	3	114	2	0	1	0	0	0	0	0	3	117
11:00 AM	2	38	0	2	0	35	18	2	93	6	0	4	0	0	0	0	0	10	103
11:15 AM	4	44	0	3	0	33	19	5	100	16	0	4	0	0	0	0	0	20	120
11:30 AM	6	51	0	4	0	45	21	2	123	13	0	5	1	0	0	0	0	18	141
11:45 AM	6	64	0	5	0	35	15	3	120	15	0	6	1	0	0	0	0	21	141
12:00 PM	1	47	0	4	0	47	22	3	117	15	0	6	1	0	0	0	0	21	138
12:15 PM	9	63	0	3	0	40	16	3	128	13	0	6	0	0	0	0	0	19	147
12:30 PM	8	59	0	3	0	44	25	4	136	11	0	5	0	0	0	0	0	16	152
12:45 PM	6	66	0	3	0	40	24	3	136	19	0	9	0	0	0	0	0	28	164
1:00 PM	1	57	0	0	0	34	20	5	112	21	0	3	1	0	0	0	0	24	136
1:15 PM	7	54	0	8	0	32	28	3	121	21	0	8	0	0	0	0	0	29	150
1:30 PM	7	64	0	2	0	29	16	2	116	18	0	6	0	0	0	0	0	24	140
1:45 PM	4	71	0	5	0	41	15	4	131	23	0	7	0	0	0	0	0	30	161
3:00 PM	4	73	0	6	0	48	22	3	147	14	0	8	3	0	0	0	0	22	169
3:15 PM	4	61	0	3	0	47	24	5	136	21	0	3	0	0	0	0	0	24	160
3:30 PM	5	58	0	3	0	33	26	3	122	28	0	4	0	0	0	0	0	32	154
3:45 PM	3	69	0	3	0	46	17	2	135	19	0	7	0	0	0	0	0	26	161
4:00 PM	2	79	0	4	0	39	26	3	146	27	0	14	3	0	0	0	0	41	187
4:15 PM	4	75	0	5	0	50	15	2	144	18	0	6	0	0	0	0	0	24	168
4:30 PM	4	51	0	1	0	50	17	0	122	20	0	11	0	0	0	0	0	31	153
4:45 PM	3	51	0	1	0	45	15	0	114	10	0	9	0	0	0	0	0	19	133
5:00 PM	8	63	0	1	0	50	22	0	143	25	0	10	0	0	0	0	0	35	178
5:15 PM	6	57	0	0	0	64	19	1	146	16	0	9	0	0	0	0	0	25	171
5:30 PM	8	75	0	0	0	55	20	1	158	19	0	7	1	0	0	0	0	26	184
5:45 PM	10	50	0	1	0	47	11	0	118	31	0	11	0	0	0	0	0	42	160

AM Peak Hour

7:30 AM to 8:30 AM

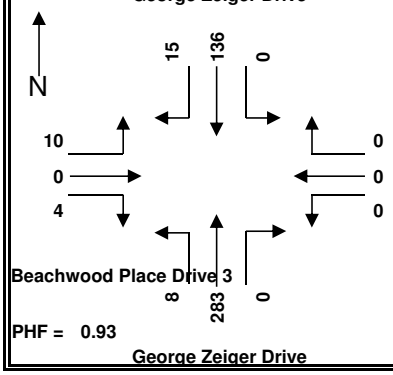

Midday Peak Hour

12:00 PM to 1:00 PM

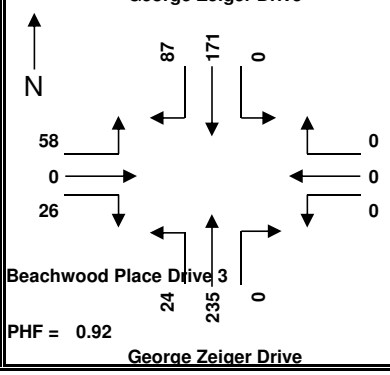

PM Peak Hour

5:00 PM to 6:00 PM

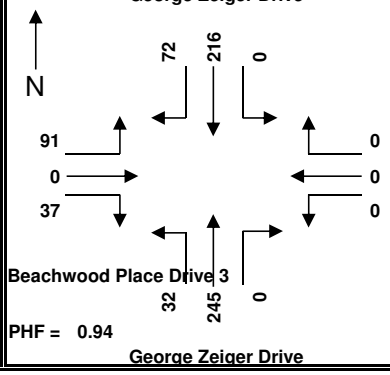

Notes:

15-Minute Count Data

Four Seasons Apartments and George Zeiger Drive

Beachwood, Ohio

URS
564 White Pond Drive
Akron, OH 44320-1100
Tel: 330.836.9111
Fax: 330.836.9115

Seasonal Factor	Day of Week	Date	Start Time	End Time	Weather
0.954	Tuesday	June 4, 2013	7:00 AM	10:00 AM	
0.954	Tuesday	June 4, 2013	11:00 AM	2:00 PM	
0.954	Tuesday	June 4, 2013	3:00 PM	6:00 PM	

Roadway Classification:

ADT Factor: 1.71
Intersection ID: 34

Start Time	Four Seasons Apartments Northbound				Southbound				Total North South	George Zeiger Drive Eastbound				George Zeiger Drive Westbound				Total East West	Total All Dir.
	LT	THRU	RT	Truck	LT	THRU	RT	Truck		LT	THRU	RT	Truck	LT	THRU	RT	Truck		
Totals	244	0	185	10	0	0	0	0	429	2002	0	238	48	135	1418	0	45	3793	4222
	Percent Trucks =			2%	Percent Trucks =			0%		Percent Trucks =			2%	Percent Trucks =			3%		
ADT	397	0	301	16	0	0	0	0	698	3259	0	387	78	220	2308	0	73	6175	6873
7:00 AM	7	0	4	0	0	0	0	0	11	36	0	2	0	1	22	0	1	61	72
7:15 AM	6	0	7	0	0	0	0	0	13	51	0	1	2	1	25	0	1	78	91
7:30 AM	13	0	2	0	0	0	0	0	15	58	0	3	1	1	35	0	0	97	112
7:45 AM	7	0	5	0	0	0	0	0	12	72	0	8	0	2	34	0	0	116	128
8:00 AM	8	0	9	0	0	0	0	0	17	62	0	1	0	0	22	0	0	85	102
8:15 AM	6	0	3	0	0	0	0	0	9	68	0	2	1	2	33	0	3	105	114
8:30 AM	14	0	6	0	0	0	0	0	20	53	0	2	1	5	31	0	3	91	111
8:45 AM	4	0	2	0	0	0	0	0	6	44	0	7	0	2	38	0	3	91	97
9:00 AM	9	0	3	1	0	0	0	0	12	38	0	4	1	2	31	0	0	75	87
9:15 AM	8	0	5	0	0	0	0	0	13	44	0	3	1	6	44	0	2	97	110
9:30 AM	5	0	5	1	0	0	0	0	10	45	0	2	3	3	24	0	0	74	84
9:45 AM	2	0	2	0	0	0	0	0	4	45	0	8	2	4	27	0	1	84	88
11:00 AM	5	0	7	0	0	0	0	0	12	33	0	6	1	3	31	0	0	73	85
11:15 AM	8	0	5	1	0	0	0	0	13	38	0	7	1	2	38	0	3	85	98
11:30 AM	12	0	3	0	0	0	0	0	15	55	0	6	3	5	35	0	1	101	116
11:45 AM	14	0	7	1	0	0	0	0	21	50	0	3	3	8	35	0	0	96	117
12:00 PM	9	0	3	0	0	0	0	0	12	43	0	10	3	5	41	0	1	99	111
12:15 PM	6	0	12	1	0	0	0	0	18	64	0	9	1	6	39	0	3	118	136
12:30 PM	8	0	11	0	0	0	0	0	19	58	0	7	4	3	43	0	1	111	130
12:45 PM	4	0	8	1	0	0	0	0	12	56	0	16	0	6	44	0	2	122	134
1:00 PM	11	0	4	0	0	0	0	0	15	57	0	0	0	4	32	0	1	93	108
1:15 PM	2	0	5	2	0	0	0	0	7	51	0	12	1	3	34	0	2	100	107
1:30 PM	7	0	4	0	0	0	0	0	11	63	0	6	2	3	27	0	1	99	110
1:45 PM	1	0	5	0	0	0	0	0	6	69	0	12	1	1	45	0	1	127	133
3:00 PM	5	0	4	0	0	0	0	0	9	67	0	12	4	3	43	0	3	125	134
3:15 PM	4	0	6	1	0	0	0	0	10	55	0	5	1	6	45	0	5	111	121
3:30 PM	7	0	4	0	0	0	0	0	11	57	0	6	1	4	33	0	0	100	111
3:45 PM	6	0	5	0	0	0	0	0	11	60	0	11	1	9	49	0	2	129	140
4:00 PM	7	0	6	1	0	0	0	0	13	76	0	9	2	4	39	0	2	128	141
4:15 PM	5	0	5	0	0	0	0	0	10	76	0	9	2	5	54	0	2	144	154
4:30 PM	7	0	4	0	0	0	0	0	11	53	0	4	1	5	50	0	0	112	123
4:45 PM	3	0	2	0	0	0	0	0	5	52	0	6	1	5	57	0	0	120	125
5:00 PM	7	0	7	0	0	0	0	0	14	65	0	5	1	2	53	0	0	125	139
5:15 PM	5	0	3	0	0	0	0	0	8	63	0	9	1	7	70	0	0	149	157
5:30 PM	8	0	8	0	0	0	0	0	16	69	0	15	0	4	54	0	1	142	158
5:45 PM	4	0	4	0	0	0	0	0	8	56	0	10	1	3	61	0	0	130	138

AM Peak Hour

7:30 AM to 8:30 AM

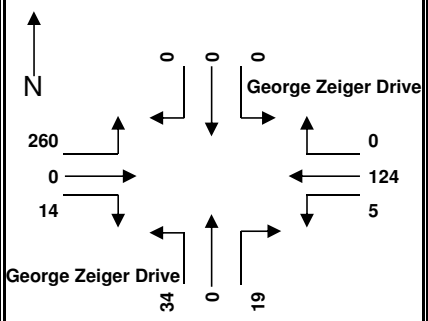

PHF = 0.89

Four Seasons Apartments

Midday Peak Hour

12:00 PM to 1:00 PM

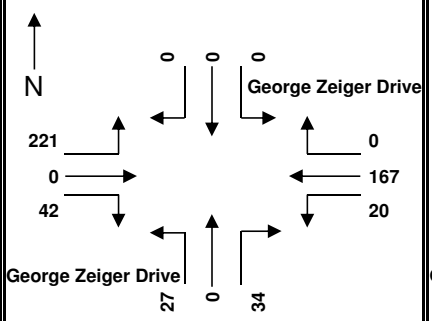

PHF = 0.94

Four Seasons Apartments

PM Peak Hour

5:00 PM to 6:00 PM

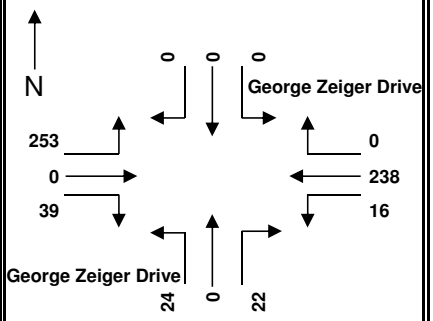

PHF = 0.94

Four Seasons Apartments

Notes:

15-Minute Count Data

Beachwood Drive 4 and Apartment and George Zeiger

Beachwood, Ohio

URS
564 White Pond Drive
Akron, OH 44320-1100
Tel: 330.836.9111
Fax: 330.836.9115

Seasonal Factor	Day of Week	Date	Start Time	End Time	Weather
0.954	Tuesday	June 4, 2013	7:00 AM	10:00 AM	
0.954	Tuesday	June 4, 2013	11:00 AM	2:00 PM	
0.954	Tuesday	June 4, 2013	3:00 PM	6:00 PM	

Roadway Classification:

ADT Factor: 1.71
Intersection ID: 34

Start Time	Apartment Northbound				Beachwood Drive 4 Southbound				Total North South	George Zeiger Eastbound				George Zeiger Westbound				Total East West	Total All Dir.
	LT	THRU	RT	Truck	LT	THRU	RT	Truck		LT	THRU	RT	Truck	LT	THRU	RT	Truck		
Totals	0	0	0	0	368	1	1090	8	1459	1231	1872	0	45	0	1462	203	44	4768	6227
	Percent Trucks =			0%	Percent Trucks =			1%		Percent Trucks =			1%	Percent Trucks =			3%		
ADT	0	0	0	0	599	2	1775	13	2375	2004	3048	0	73	0	2380	330	72	7762	10137
7:00 AM	0	0	0	0	0	0	0	0	0	2	44	0	1	0	27	3	1	76	76
7:15 AM	0	0	0	0	0	0	1	0	1	1	52	0	1	0	27	2	1	82	83
7:30 AM	0	0	0	0	0	0	2	0	2	2	58	0	1	0	48	1	0	109	111
7:45 AM	0	0	0	0	0	0	5	0	5	13	81	0	0	0	38	2	0	134	139
8:00 AM	0	0	0	0	0	0	1	0	1	5	57	0	0	0	31	3	0	96	97
8:15 AM	0	0	0	0	0	0	4	0	4	9	73	0	1	0	42	0	4	124	128
8:30 AM	0	0	0	0	2	0	0	0	2	17	50	0	1	0	39	4	2	110	112
8:45 AM	0	0	0	0	3	0	4	0	7	19	54	0	1	0	34	6	2	113	120
9:00 AM	0	0	0	0	3	0	7	0	10	11	33	0	0	0	35	4	1	83	93
9:15 AM	0	0	0	0	1	0	6	1	7	14	46	0	1	0	44	7	2	111	118
9:30 AM	0	0	0	0	0	0	7	0	7	14	50	0	2	0	21	5	0	90	97
9:45 AM	0	0	0	0	4	0	6	0	10	28	51	0	4	0	27	4	1	110	120
11:00 AM	0	0	0	0	10	0	21	1	31	33	29	0	1	0	33	6	0	101	132
11:15 AM	0	0	0	0	8	0	27	1	35	48	39	0	1	0	37	6	3	130	165
11:30 AM	0	0	0	0	7	0	25	0	32	54	51	0	3	0	43	10	1	158	190
11:45 AM	0	0	0	0	17	0	49	0	66	53	46	0	1	0	38	10	1	147	213
12:00 PM	0	0	0	0	12	0	41	1	53	55	38	0	2	0	47	6	1	146	199
12:15 PM	0	0	0	0	16	0	36	0	52	48	54	0	1	0	39	7	3	148	200
12:30 PM	0	0	0	0	15	0	48	0	63	38	51	0	4	0	38	12	1	139	202
12:45 PM	0	0	0	0	11	0	43	0	54	70	61	0	0	0	38	8	2	177	231
1:00 PM	0	0	0	0	12	1	60	0	73	44	41	0	0	0	31	11	0	127	200
1:15 PM	0	0	0	0	17	0	43	1	60	42	47	0	2	0	33	6	2	128	188
1:30 PM	0	0	0	0	15	0	29	0	44	38	56	0	1	0	29	6	1	129	173
1:45 PM	0	0	0	0	18	0	49	1	67	35	60	0	1	0	34	8	1	137	204
3:00 PM	0	0	0	0	18	0	48	0	66	42	61	0	3	0	48	7	3	158	224
3:15 PM	0	0	0	0	14	0	54	1	68	48	51	0	0	0	45	1	5	145	213
3:30 PM	0	0	0	0	13	0	46	0	59	53	49	0	1	0	33	5	1	140	199
3:45 PM	0	0	0	0	19	0	37	0	56	53	57	0	1	0	46	6	0	162	218
4:00 PM	0	0	0	0	26	0	39	0	65	45	55	0	3	0	46	4	2	150	215
4:15 PM	0	0	0	0	14	0	48	0	62	30	65	0	2	0	52	8	2	155	217
4:30 PM	0	0	0	0	13	0	46	1	59	44	43	0	1	0	56	7	0	150	209
4:45 PM	0	0	0	0	21	0	43	0	64	43	35	0	1	0	46	4	0	128	192
5:00 PM	0	0	0	0	9	0	47	0	56	43	60	0	1	0	61	7	0	171	227
5:15 PM	0	0	0	0	22	0	59	0	81	55	48	0	1	0	59	6	0	168	249
5:30 PM	0	0	0	0	17	0	56	0	73	31	72	0	0	0	64	7	1	174	247
5:45 PM	0	0	0	0	11	0	53	0	64	51	54	0	1	0	53	4	0	162	226

AM Peak Hour

7:30 AM to 8:30 AM

Beachwood Drive 4

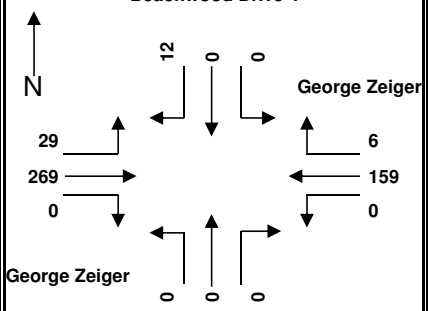

PHF = 0.85

Apartment

Midday Peak Hour

12:00 PM to 1:00 PM

Beachwood Drive 4

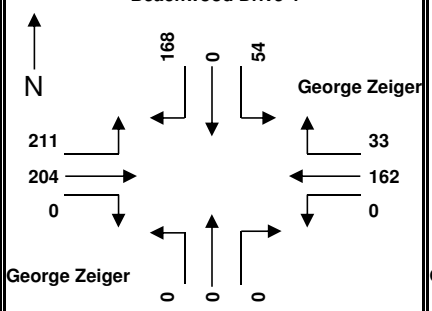

PHF = 0.90

Apartment

PM Peak Hour

5:00 PM to 6:00 PM

Beachwood Drive 4

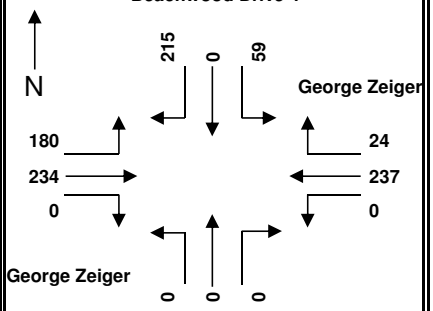

PHF = 0.95

Apartment

Notes:

15-Minute Count Data

N. Village Lane and George Zeiger Drive

Beachwood, Ohio

URS
564 White Pond Drive
Akron, OH 44320-1100
Tel: 330.836.9111
Fax: 330.836.9115

Seasonal Factor	Day of Week	Date	Start Time	End Time	Weather
0.954	Tuesday	June 4, 2013	7:00 AM	10:00 AM	
0.954	Tuesday	June 4, 2013	11:00 AM	2:00 PM	
0.954	Tuesday	June 4, 2013	3:00 PM	6:00 PM	

Roadway Classification:

ADT Factor: 1.71
Intersection ID: 34

Start Time	N. Village Lane Northbound				Southbound				Total North South	George Zeiger Drive Eastbound				George Zeiger Drive Westbound				Total East West	Total All Dir.
	LT	THRU	RT	Truck	LT	THRU	RT	Truck		LT	THRU	RT	Truck	LT	THRU	RT	Truck		
Totals	424	0	515	31	0	0	0	0	939	0	2613	420	52	405	2152	0	44	5590	6529
	Percent Trucks =			3%	Percent Trucks =			0%		Percent Trucks =			2%	Percent Trucks =			2%		
ADT	690	0	838	50	0	0	0	0	1529	0	4254	684	85	659	3503	0	72	9100	10629
7:00 AM	10	0	18	0	0	0	0	0	28	0	25	1	1	6	22	0	0	54	82
7:15 AM	16	0	27	1	0	0	0	0	43	0	27	4	2	2	25	0	1	58	101
7:30 AM	13	0	30	0	0	0	0	0	43	0	40	1	1	2	51	0	0	94	137
7:45 AM	22	0	22	0	0	0	0	0	44	0	74	12	0	8	33	0	0	127	171
8:00 AM	11	0	21	0	0	0	0	0	32	0	45	5	1	4	28	0	0	82	114
8:15 AM	20	0	18	1	0	0	0	0	38	0	60	3	0	8	32	0	4	103	141
8:30 AM	14	0	23	0	0	0	0	0	37	0	43	3	2	9	31	0	1	86	123
8:45 AM	8	0	15	0	0	0	0	0	23	0	54	21	2	11	24	0	2	110	133
9:00 AM	12	0	13	0	0	0	0	0	25	0	35	9	0	11	35	0	2	90	115
9:15 AM	13	0	14	2	0	0	0	0	27	0	47	10	3	8	39	0	1	104	131
9:30 AM	9	0	13	1	0	0	0	0	22	0	53	6	2	5	26	0	0	90	112
9:45 AM	5	0	17	0	0	0	0	0	22	0	67	10	5	6	27	0	1	110	132
11:00 AM	5	0	11	0	0	0	0	0	16	0	55	17	1	10	43	0	1	125	141
11:15 AM	19	0	7	2	0	0	0	0	26	0	79	10	2	8	60	0	4	157	183
11:30 AM	17	0	14	3	0	0	0	0	31	0	95	13	3	5	62	0	0	175	206
11:45 AM	11	0	10	1	0	0	0	0	21	0	90	10	1	14	68	0	0	182	203
12:00 PM	14	0	14	3	0	0	0	0	28	0	81	13	4	26	71	0	4	191	219
12:15 PM	16	0	15	3	0	0	0	0	31	0	86	11	1	8	67	0	2	172	203
12:30 PM	15	0	12	3	0	0	0	0	27	0	79	22	5	10	75	0	2	186	213
12:45 PM	7	0	14	0	0	0	0	0	21	0	112	11	0	8	69	0	3	200	221
1:00 PM	6	0	14	0	0	0	0	0	20	0	76	12	1	7	87	0	0	182	202
1:15 PM	8	0	16	2	0	0	0	0	24	0	71	9	0	11	64	0	1	155	179
1:30 PM	11	0	15	1	0	0	0	0	26	0	76	17	1	7	49	0	1	149	175
1:45 PM	4	0	10	0	0	0	0	0	14	0	80	7	1	9	74	0	1	170	184
3:00 PM	8	0	12	2	0	0	0	0	20	0	84	14	4	12	83	0	3	193	213
3:15 PM	8	0	15	1	0	0	0	0	23	0	95	13	1	15	81	0	4	204	227
3:30 PM	8	0	7	2	0	0	0	0	15	0	94	12	0	11	66	0	0	183	198
3:45 PM	12	0	13	1	0	0	0	0	25	0	85	16	1	14	74	0	1	189	214
4:00 PM	9	0	14	1	0	0	0	0	23	0	90	13	2	15	70	0	2	188	211
4:15 PM	11	0	15	0	0	0	0	0	26	0	80	13	1	26	79	0	2	198	224
4:30 PM	16	0	10	0	0	0	0	0	26	0	79	15	1	14	82	0	0	190	216
4:45 PM	11	0	7	0	0	0	0	0	18	0	73	17	1	16	82	0	0	188	206
5:00 PM	16	0	14	1	0	0	0	0	30	0	89	15	0	11	95	0	0	210	240
5:15 PM	10	0	9	0	0	0	0	0	19	0	96	18	1	26	99	0	0	239	258
5:30 PM	15	0	5	0	0	0	0	0	20	0	97	20	1	14	97	0	1	228	248
5:45 PM	14	0	11	0	0	0	0	0	25	0	101	17	0	28	82	0	0	228	253

AM Peak Hour

7:30 AM to 8:30 AM

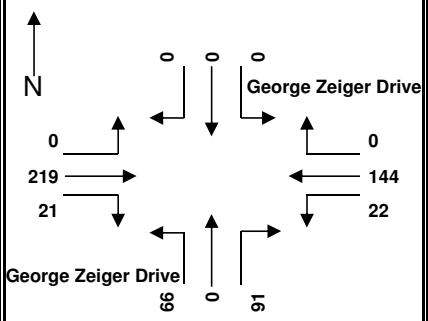

PHF = 0.82

N. Village Lane

Midday Peak Hour

12:00 PM to 1:00 PM

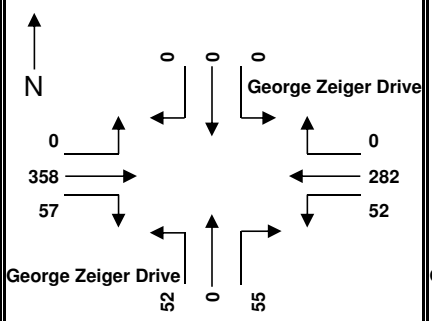

PHF = 0.97

N. Village Lane

PM Peak Hour

5:00 PM to 6:00 PM

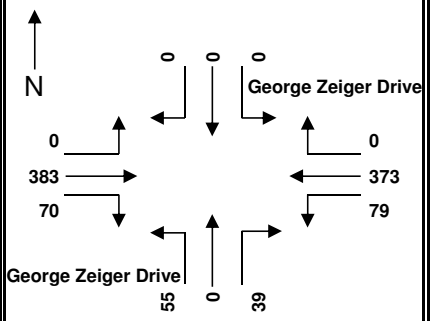

PHF = 0.97

N. Village Lane

Notes:

15-Minute Count Data

Richmond Road and George Zeiger Drive

Beachwood, Ohio

URS
564 White Pond Drive
Akron, OH 44320-1100
Tel: 330.836.9111
Fax: 330.836.9115

Seasonal Factor	Day of Week	Date	Start Time	End Time	Weather
0.921	Tuesday	June 4, 2013	7:00 AM	10:00 AM	
0.921	Tuesday	June 4, 2013	11:00 AM	2:00 PM	
0.921	Tuesday	June 4, 2013	3:00 PM	6:00 PM	

Roadway Classification:

ADT Factor: 1.70
Intersection ID: 34

Start Time	Richmond Road Northbound				Richmond Road Southbound				Total North South	Eastbound				George Zeiger Drive Westbound				Total East West	Total All Dir.
	LT	THRU	RT	Truck	LT	THRU	RT	Truck		LT	THRU	RT	Truck	LT	THRU	RT	Truck		
Totals	0	5236	2162	109	870	5090	0	95	13358	0	0	0	0	1742	0	818	42	2560	15918
	Percent Trucks =			1%	Percent Trucks =			2%		Percent Trucks =			0%	Percent Trucks =			2%		
ADT	0	8201	3386	171	1363	7973	0	149	20923	0	0	0	0	2729	0	1281	66	4010	24933
7:00 AM	0	49	27	3	3	79	0	2	158	0	0	0	0	22	0	6	1	28	186
7:15 AM	0	81	24	6	6	134	0	3	245	0	0	0	0	23	0	13	0	36	281
7:30 AM	0	84	28	2	5	178	0	0	295	0	0	0	0	49	0	12	2	61	356
7:45 AM	0	132	52	4	31	225	0	8	440	0	0	0	0	32	0	22	0	54	494
8:00 AM	0	117	34	3	14	166	0	5	331	0	0	0	0	23	0	17	0	40	371
8:15 AM	0	73	54	5	9	148	0	4	284	0	0	0	0	28	0	18	1	46	330
8:30 AM	0	108	38	6	14	157	0	4	317	0	0	0	0	33	0	14	3	47	364
8:45 AM	0	119	50	8	25	149	0	4	343	0	0	0	0	29	0	9	0	38	381
9:00 AM	0	110	31	2	12	122	0	0	275	0	0	0	0	27	0	12	0	39	314
9:15 AM	0	103	37	1	15	98	0	2	253	0	0	0	0	38	0	18	2	56	309
9:30 AM	0	89	43	1	16	98	0	2	246	0	0	0	0	22	0	13	0	35	281
9:45 AM	0	100	54	6	21	93	0	4	268	0	0	0	0	24	0	10	0	34	302
11:00 AM	0	108	47	1	26	108	0	5	289	0	0	0	0	37	0	18	0	55	344
11:15 AM	0	141	61	2	23	109	0	3	334	0	0	0	0	44	0	25	3	69	403
11:30 AM	0	143	78	9	28	126	0	2	375	0	0	0	0	52	0	27	3	79	454
11:45 AM	0	145	75	3	20	150	0	3	390	0	0	0	0	56	0	28	1	84	474
12:00 PM	0	162	63	4	37	127	0	4	389	0	0	0	0	50	0	25	1	75	464
12:15 PM	0	168	68	0	35	148	0	2	419	0	0	0	0	54	0	22	1	76	495
12:30 PM	0	148	66	5	22	118	0	0	354	0	0	0	0	67	0	30	1	97	451
12:45 PM	0	163	93	2	38	141	0	2	435	0	0	0	0	59	0	20	0	79	514
1:00 PM	0	138	75	3	16	131	0	3	360	0	0	0	0	52	0	36	0	88	448
1:15 PM	0	151	59	4	26	162	0	3	398	0	0	0	0	47	0	27	1	74	472
1:30 PM	0	140	66	2	25	134	0	4	365	0	0	0	0	39	0	19	2	58	423
1:45 PM	0	136	59	3	32	108	0	3	335	0	0	0	0	59	0	25	1	84	419
3:00 PM	0	171	79	5	26	165	0	4	441	0	0	0	0	65	0	21	3	86	527
3:15 PM	0	159	63	1	37	152	0	2	411	0	0	0	0	70	0	31	3	101	512
3:30 PM	0	195	73	2	34	141	0	3	443	0	0	0	0	50	0	22	2	72	515
3:45 PM	0	192	91	4	20	161	0	1	464	0	0	0	0	61	0	30	2	91	555
4:00 PM	0	167	69	1	33	176	0	1	445	0	0	0	0	59	0	21	2	80	525
4:15 PM	0	189	66	1	30	139	0	2	424	0	0	0	0	56	0	28	1	84	508
4:30 PM	0	181	63	3	29	160	0	1	433	0	0	0	0	63	0	30	2	93	526
4:45 PM	0	201	57	1	31	168	0	0	457	0	0	0	0	71	0	27	0	98	555
5:00 PM	0	197	78	0	29	155	0	3	459	0	0	0	0	66	0	37	1	103	562
5:15 PM	0	212	77	3	33	165	0	3	487	0	0	0	0	76	0	29	1	105	592
5:30 PM	0	211	81	1	32	143	0	1	467	0	0	0	0	75	0	41	2	116	583
5:45 PM	0	253	83	2	37	156	0	2	529	0	0	0	0	64	0	35	0	99	628

AM Peak Hour

7:30 AM to 8:30 AM

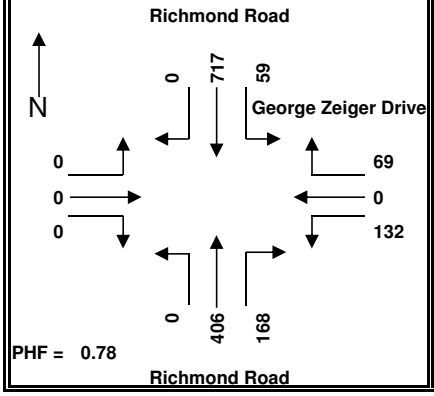

Midday Peak Hour

12:00 PM to 1:00 PM

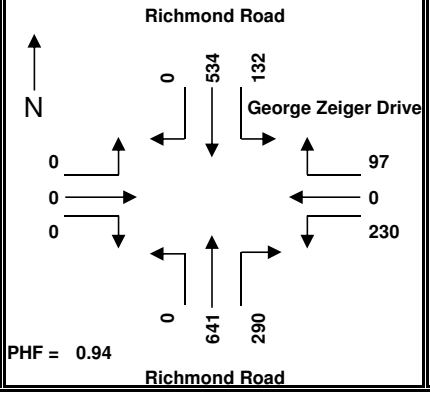

PM Peak Hour

5:00 PM to 6:00 PM

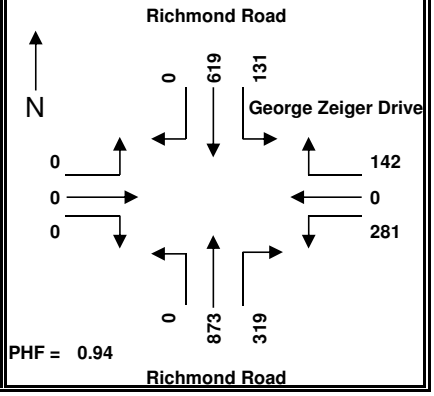

Notes:

15-Minute Count Data
Richmond Road and Hilltop Drive
Beachwood, Ohio

URS
564 White Pond Drive
Akron, OH 44320-1100
Tel: 330.836.9111
Fax: 330.836.9115

Seasonal Factor	Day of Week	Date	Start Time	End Time	Weather
0.921	Tuesday	June 4, 2013	7:00 AM	10:00 AM	
0.921	Tuesday	June 4, 2013	11:00 AM	2:00 PM	
0.921	Tuesday	June 4, 2013	3:00 PM	6:00 PM	

Roadway Classification:

ADT Factor: 1.70
Intersection ID: 34

Start Time	Richmond Road Northbound				Richmond Road Southbound				Total North South	Hilltop Drive Eastbound				Westbound				Total East West	Total All Dir.
	LT	THRU	RT	Truck	LT	THRU	RT	Truck		LT	THRU	RT	Truck	LT	THRU	RT	Truck		
Totals	358	5707	0	84	0	5449	282	85	11796	259	0	504	27	0	0	0	0	763	12559
	Percent Trucks =			1%	Percent Trucks =			1%		Percent Trucks =			4%	Percent Trucks =			0%		
ADT	561	8939	0	132	0	8535	442	133	18476	406	0	789	42	0	0	0	0	1195	19671
7:00 AM	5	52	0	2	0	83	4	1	144	7	0	3	1	0	0	0	0	10	154
7:15 AM	6	96	0	4	0	124	6	4	232	11	0	14	1	0	0	0	0	25	257
7:30 AM	12	92	0	1	0	167	10	1	281	13	0	20	1	0	0	0	0	33	314
7:45 AM	40	120	0	4	0	195	11	5	366	12	0	41	5	0	0	0	0	53	419
8:00 AM	9	125	0	4	0	168	7	7	309	15	0	29	0	0	0	0	0	44	353
8:15 AM	8	86	0	4	0	128	2	6	224	5	0	12	0	0	0	0	0	17	241
8:30 AM	5	116	0	6	0	171	8	5	300	5	0	15	0	0	0	0	0	20	320
8:45 AM	9	118	0	6	0	141	7	2	275	6	0	22	1	0	0	0	0	28	303
9:00 AM	8	115	0	3	0	127	6	1	256	8	0	11	0	0	0	0	0	19	275
9:15 AM	7	110	0	1	0	102	8	2	227	6	0	9	0	0	0	0	0	15	242
9:30 AM	4	92	0	0	0	105	2	1	203	4	0	12	0	0	0	0	0	16	219
9:45 AM	5	101	0	4	0	105	7	3	218	7	0	6	1	0	0	0	0	13	231
11:00 AM	11	116	0	1	0	130	4	6	261	5	0	5	0	0	0	0	0	10	271
11:15 AM	10	153	0	2	0	121	10	2	294	5	0	9	1	0	0	0	0	14	308
11:30 AM	5	164	0	8	0	140	5	1	314	7	0	13	1	0	0	0	0	20	334
11:45 AM	9	160	0	2	0	163	7	3	339	7	0	9	0	0	0	0	0	16	355
12:00 PM	8	182	0	4	0	148	4	4	342	6	0	15	1	0	0	0	0	21	363
12:15 PM	9	181	0	0	0	160	4	2	354	5	0	17	0	0	0	0	0	22	376
12:30 PM	5	167	0	1	0	137	12	4	321	10	0	9	1	0	0	0	0	19	340
12:45 PM	10	186	0	3	0	163	8	3	367	8	0	12	1	0	0	0	0	20	387
1:00 PM	14	162	0	3	0	151	7	2	334	8	0	11	1	0	0	0	0	19	353
1:15 PM	9	162	0	4	0	161	5	3	337	6	0	8	0	0	0	0	0	14	351
1:30 PM	6	150	0	1	0	160	8	3	324	7	0	5	1	0	0	0	0	12	336
1:45 PM	5	159	0	3	0	128	5	3	297	4	0	11	1	0	0	0	0	15	312
3:00 PM	9	179	0	1	0	168	6	3	362	9	0	20	1	0	0	0	0	29	391
3:15 PM	8	188	0	0	0	170	9	1	375	9	0	26	2	0	0	0	0	35	410
3:30 PM	17	204	0	2	0	158	10	1	389	7	0	16	1	0	0	0	0	23	412
3:45 PM	15	213	0	3	0	166	10	0	404	11	0	18	1	0	0	0	0	29	433
4:00 PM	3	180	0	0	0	204	9	1	396	9	0	11	1	0	0	0	0	20	416
4:15 PM	13	210	0	1	0	150	9	1	382	4	0	14	1	0	0	0	0	18	400
4:30 PM	10	197	0	2	0	188	10	0	405	5	0	11	0	0	0	0	0	16	421
4:45 PM	7	209	0	0	0	174	7	0	397	6	0	7	1	0	0	0	0	13	410
5:00 PM	15	222	0	0	0	178	11	1	426	7	0	18	1	0	0	0	0	25	451
5:15 PM	8	229	0	1	0	179	20	2	436	5	0	10	0	0	0	0	0	15	451
5:30 PM	15	240	0	2	0	175	7	1	437	5	0	17	0	0	0	0	0	22	459
5:45 PM	19	271	0	1	0	161	17	0	468	5	0	18	0	0	0	0	0	23	491

AM Peak Hour
7:30 AM to 8:30 AM

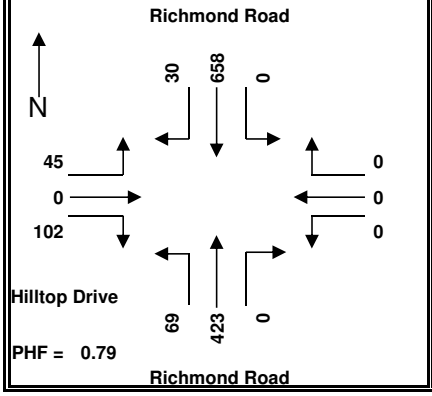

Midday Peak Hour
12:00 PM to 1:00 PM

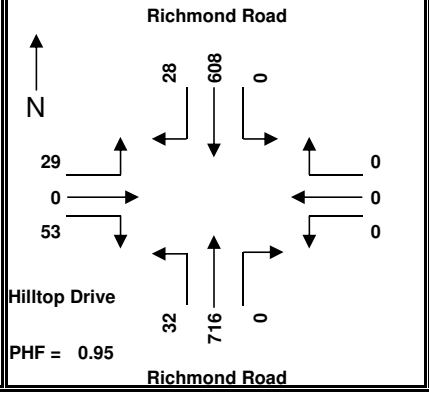

PM Peak Hour
5:00 PM to 6:00 PM

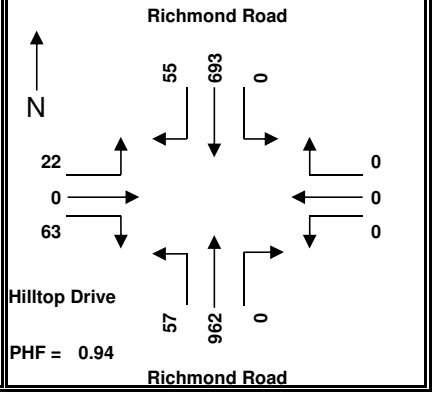

Notes:

15-Minute Count Data

Richmond Road and Community Drive

Beachwood, Ohio

URS
564 White Pond Drive
Akron, OH 44320-1100
Tel: 330.836.9111
Fax: 330.836.9115

Seasonal Factor	Day of Week	Date	Start Time	End Time	Weather
0.921	Tuesday	June 4, 2013	7:00 AM	10:00 AM	
0.921	Tuesday	June 4, 2013	11:00 AM	2:00 PM	
0.921	Tuesday	June 4, 2013	3:00 PM	6:00 PM	

Roadway Classification:

ADT Factor: 1.70
Intersection ID: 34

Start Time	Richmond Road Northbound				Richmond Road Southbound				Total North South	Community Drive Eastbound				Westbound				Total East West	Total All Dir.
	LT	THRU	RT	Truck	LT	THRU	RT	Truck		LT	THRU	RT	Truck	LT	THRU	RT	Truck		
Totals	13	5949	0	78	0	5711	35	91	11708	17	0	38	7	0	0	0	0	55	11763
	Percent Trucks =			1%	Percent Trucks =			2%		Percent Trucks =			13%	Percent Trucks =			0%		
ADT	20	9318	0	122	0	8945	55	143	18339	27	0	60	11	0	0	0	0	86	18425
7:00 AM	0	59	0	0	0	87	1	1	147	1	0	1	0	0	0	0	0	2	149
7:15 AM	0	107	0	3	0	134	0	4	241	0	0	0	0	0	0	0	0	0	241
7:30 AM	2	104	0	2	0	191	0	1	297	1	0	3	0	0	0	0	0	4	301
7:45 AM	2	131	0	3	0	181	0	4	314	0	0	1	1	0	0	0	0	1	315
8:00 AM	0	139	0	3	0	176	0	7	315	0	0	0	0	0	0	0	0	0	315
8:15 AM	0	92	0	3	0	130	1	6	223	1	0	0	0	0	0	0	0	1	224
8:30 AM	0	122	0	6	0	182	2	5	306	1	0	1	0	0	0	0	0	2	308
8:45 AM	0	124	0	6	0	144	1	2	269	0	0	2	0	0	0	0	0	2	271
9:00 AM	0	127	0	3	0	133	0	1	260	0	0	0	0	0	0	0	0	0	260
9:15 AM	0	113	0	1	0	109	3	3	225	1	0	2	0	0	0	0	0	3	228
9:30 AM	0	96	0	0	0	105	0	2	201	1	0	0	0	0	0	0	0	1	202
9:45 AM	0	111	0	5	0	115	1	3	227	0	0	2	1	0	0	0	0	2	229
11:00 AM	1	118	0	2	0	135	0	7	254	2	0	0	0	0	0	0	0	2	256
11:15 AM	0	159	0	2	0	131	2	2	292	0	0	2	0	0	0	0	0	2	294
11:30 AM	0	170	0	8	0	145	1	2	316	1	0	0	0	0	0	0	0	1	317
11:45 AM	0	171	0	2	0	169	0	3	340	2	0	0	0	0	0	0	0	2	342
12:00 PM	0	186	0	3	0	153	4	5	343	0	0	0	0	0	0	0	0	0	343
12:15 PM	0	185	0	0	0	165	0	2	350	0	0	0	0	0	0	0	0	0	350
12:30 PM	0	183	0	3	0	145	0	3	328	0	0	0	0	0	0	0	0	0	328
12:45 PM	0	188	0	1	0	154	0	3	342	1	0	1	0	0	0	0	0	2	344
1:00 PM	0	172	0	3	0	165	0	2	337	0	0	2	1	0	0	0	0	2	339
1:15 PM	3	171	0	2	0	158	0	2	332	0	0	1	0	0	0	0	0	1	333
1:30 PM	1	159	0	3	0	166	1	5	327	1	0	2	1	0	0	0	0	3	330
1:45 PM	0	158	0	2	0	128	1	5	287	0	0	3	1	0	0	0	0	3	290
3:00 PM	0	190	0	3	0	181	1	3	372	0	0	2	0	0	0	0	0	2	374
3:15 PM	0	188	0	1	0	165	2	1	355	0	0	3	0	0	0	0	0	3	358
3:30 PM	0	207	0	1	0	173	1	1	381	0	0	0	0	0	0	0	0	0	381
3:45 PM	0	215	0	2	0	166	1	0	382	2	0	1	0	0	0	0	0	3	385
4:00 PM	0	189	0	0	0	211	0	0	400	0	0	1	1	0	0	0	0	1	401
4:15 PM	0	212	0	0	0	153	1	1	366	1	0	3	0	0	0	0	0	4	370
4:30 PM	0	204	0	2	0	204	3	1	411	1	0	1	0	0	0	0	0	2	413
4:45 PM	0	223	0	1	0	178	0	0	401	0	0	0	0	0	0	0	0	0	401
5:00 PM	1	225	0	0	0	197	0	2	423	0	0	1	1	0	0	0	0	1	424
5:15 PM	0	237	0	1	0	213	3	1	453	0	0	1	0	0	0	0	0	1	454
5:30 PM	2	248	0	0	0	201	3	1	454	0	0	1	0	0	0	0	0	1	455
5:45 PM	1	266	0	1	0	168	2	0	437	0	0	1	0	0	0	0	0	1	438

AM Peak Hour

7:30 AM to 8:30 AM

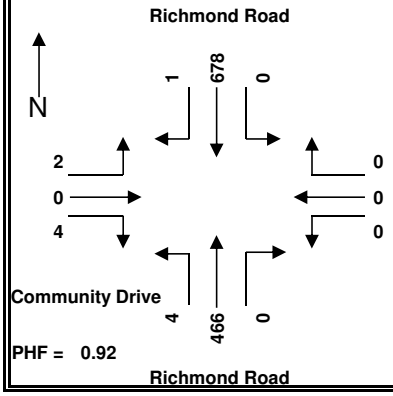

Midday Peak Hour

12:00 PM to 1:00 PM

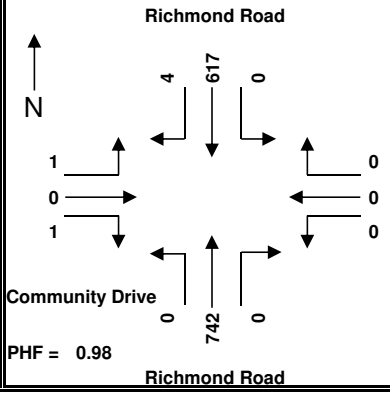

PM Peak Hour

5:00 PM to 6:00 PM

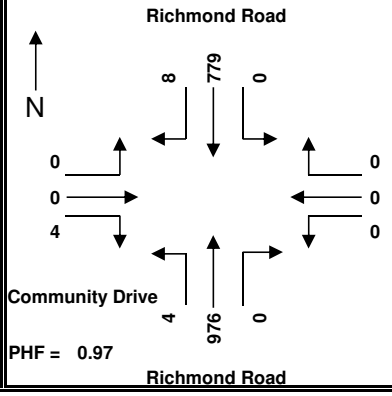

Notes:

15-Minute Count Data
Richmond Road and Cedar Road
Beachwood, Ohio

URS
564 White Pond Drive
Akron, OH 44320-1100
Tel: 330.836.9111
Fax: 330.836.9115

Seasonal Factor	Day of Week	Date	Start Time	End Time	Weather
0.944	Wednesday	June 5, 2013	7:00 AM	10:00 AM	
0.944	Wednesday	June 5, 2013	11:00 AM	2:00 PM	
0.944	Wednesday	June 5, 2013	3:00 PM	6:00 PM	

Roadway Classification:

ADT Factor: 1.71
Intersection ID: 34

Start Time	Richmond Road Northbound				Richmond Road Southbound				Total North South	Cedar Road Eastbound				Cedar Road Westbound				Total East West	Total All Dir.
	LT	THRU	RT	Truck	LT	THRU	RT	Truck		LT	THRU	RT	Truck	LT	THRU	RT	Truck		
Totals	1667	3569	643	86	3301	3880	1210	166	14270	1253	8743	1296	234	663	8429	3190	313	23574	37844
	Percent Trucks =			1%	Percent Trucks =			2%		Percent Trucks =			2%	Percent Trucks =			3%		
ADT	2685	5749	1036	139	5318	6250	1949	267	22988	2018	14084	2088	377	1068	13578	5139	504	37976	60964
7:00 AM	17	32	5	2	79	75	22	2	230	16	197	15	1	12	149	72	7	461	691
7:15 AM	18	47	9	1	91	77	33	2	275	20	284	19	6	9	217	93	7	642	917
7:30 AM	16	47	18	0	129	140	27	7	377	20	310	37	5	17	218	97	10	699	1076
7:45 AM	24	88	26	2	121	158	36	3	453	33	297	34	8	25	268	74	12	731	1184
8:00 AM	31	59	24	2	125	145	29	3	413	28	265	26	8	23	223	94	13	659	1072
8:15 AM	32	57	22	2	82	97	34	9	324	27	249	32	4	15	237	67	16	627	951
8:30 AM	33	58	13	5	99	115	31	7	349	20	261	31	8	15	183	76	13	586	935
8:45 AM	22	62	12	5	85	113	33	5	327	33	258	31	3	18	235	78	16	653	980
9:00 AM	40	68	15	6	80	105	22	6	330	11	232	24	8	15	209	69	9	560	890
9:15 AM	22	63	13	3	69	98	29	6	294	27	172	20	6	16	181	62	8	478	772
9:30 AM	31	47	9	1	74	77	24	5	262	25	199	24	10	15	213	62	10	538	800
9:45 AM	24	67	24	2	71	78	13	6	277	35	198	23	11	18	191	63	16	528	805
11:00 AM	37	80	13	2	73	63	33	3	299	32	200	36	3	13	192	46	14	519	818
11:15 AM	42	88	14	1	72	76	30	5	322	23	201	33	6	19	250	76	11	602	924
11:30 AM	51	85	18	2	71	94	30	6	349	30	205	30	15	19	206	85	6	575	924
11:45 AM	52	98	18	3	84	97	32	5	381	44	215	36	9	18	244	81	15	638	1019
12:00 PM	54	105	8	2	73	93	47	9	380	37	225	26	6	14	239	77	13	618	998
12:15 PM	53	95	16	3	73	104	37	5	378	41	219	45	9	19	250	81	10	655	1033
12:30 PM	63	96	25	1	77	103	37	4	401	38	238	42	10	14	205	72	7	609	1010
12:45 PM	66	113	11	3	99	106	43	9	438	31	257	44	8	18	207	81	13	638	1076
1:00 PM	68	107	18	5	95	111	38	8	437	30	210	42	4	17	202	72	6	573	1010
1:15 PM	53	117	25	2	93	87	34	4	409	35	226	45	12	12	195	93	9	606	1015
1:30 PM	44	81	18	2	89	96	31	2	359	43	256	58	7	13	200	83	5	653	1012
1:45 PM	42	86	14	2	75	92	39	4	348	37	235	51	3	29	209	84	11	645	993
3:00 PM	50	108	24	5	122	99	30	3	433	40	247	36	7	22	202	86	1	633	1066
3:15 PM	55	117	31	3	83	147	38	2	471	43	263	64	5	28	278	118	12	794	1265
3:30 PM	63	120	17	1	112	117	38	6	467	36	244	36	10	29	282	110	10	737	1204
3:45 PM	63	145	31	2	96	119	27	4	481	39	235	48	4	19	285	108	6	734	1215
4:00 PM	69	145	19	2	117	105	39	9	494	45	299	42	13	17	243	106	4	752	1246
4:15 PM	48	140	22	0	77	113	37	4	437	47	268	42	6	17	259	115	3	748	1185
4:30 PM	70	123	22	2	122	97	28	3	462	46	269	43	2	14	246	127	4	745	1207
4:45 PM	53	164	19	2	89	137	28	2	490	49	262	36	4	20	310	112	2	789	1279
5:00 PM	72	153	16	2	120	140	52	5	553	38	270	38	3	22	278	118	2	764	1317
5:15 PM	50	184	20	1	86	158	50	2	548	60	270	33	4	32	304	118	3	817	1365
5:30 PM	74	149	17	5	107	126	30	0	503	41	254	37	1	20	314	128	4	794	1297
5:45 PM	65	175	17	2	91	122	49	1	519	53	253	37	5	20	305	106	5	774	1293

AM Peak Hour
7:30 AM to 8:30 AM

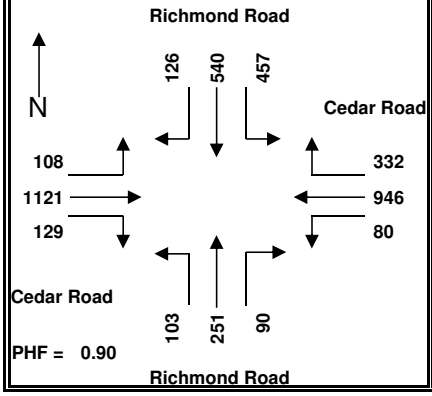

Midday Peak Hour
12:00 PM to 1:00 PM

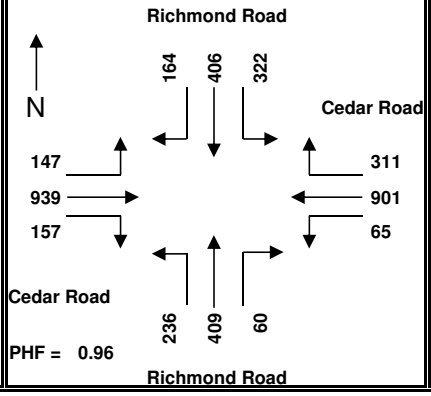

PM Peak Hour
5:00 PM to 6:00 PM

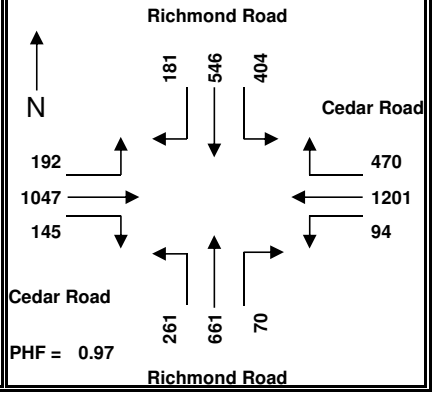

Notes:

2010 CUYAHOGA COUNTY 12
AVERAGE 24-HR TRAFFIC VOLUME

	SECT. BEGINS	TRAFFIC SECTION	SECT. LENGTH	PASS & A COM'L	B & C COM'L	TOTAL VEH.
		SR-94 (Cont'd)				
U	10.20	IR 480	.61	18000	650	18650
U	10.81	BIDDULPH AVE.	.65	9100	330	9430
	11.46	ROUTE ENDS AT US 42 IN CLEVELAND	.00			
		SR-113				
	00.00	LORAIN CO. LINE	10.26	SEE PREFERRED ROUTE		
	10.26	ROUTE ENDS AT US 6 IN ROCKY RIVER	.00			
		SR-174				
U	00.00	OLD MILL RD. IN GATES MILLS	.91	1820	40	1860
U	00.91	US 322 (MAYFIELD RD.)	1.36	3520	80	3600
U	02.27	BRIGHAM RD.	.14	8000	100	8100
U	02.41	WILSON MILLS RD.	1.41	2520	60	2580
	03.82	EQUALS STA. 0.00 IN LAKE CO.	.00			
		SR-175				
U	00.00	SR 43 (AURORA RD.) IN SOLON	.32	3690	260	3950
U	00.32	RICHMOND RD. ENTER CANNON RD.	.29	6740	480	7220
U	00.61	CANNON RD. ENTER RICHMOND RD.	.27	11210	1340	12550
U	00.88	E. CORP. BEDFORD HEIGHTS	1.10	11210	1340	12550
U	01.98	S. CORP. WARRENSVILLE HTS. MILES RD.	.35	17050	740	17790
U	02.33	US 422	.40	17050	740	17790
U	02.73	EMERY RD.	.09	19720	710	20430
U	02.82	IR 271	.92	12020	350	12370
U	03.74	S. CORP. BEACHWOOD	1.01	12020	350	12370
U	04.75	US 422 (CHAGRIN BLVD.)	.93	SEE PREFERRED ROUTE		
U	05.68	SR 87 (SHAKER BLVD.)	1.62	17350	510	17860
U	07.30	S. CORP. LYNDHURST CEDAR RD.	1.29	17350	510	17860
U	08.59	US 322 (MAYFIELD RD.)	1.24	16450	480	16930
U	09.83	S. CORP. RICHMOND HTS.	2.64	16450	480	16930
U	12.47	US 6 (CHARDON RD.)	.57	8010	230	8240
U	13.04	S. CORP. EUCLID	.39	8010	230	8240
U	13.43	US 20 (EUCLID AVE.)	.93	12140	350	12490
U	14.36	IR 90	1.34	6560	190	6750
	15.70	RTE ENDS SR 283 (LAKESHORE) IN EUCLID	.00			
		SR-176				
U	00.00	SUM. CO. LINE S. CORP. BROADVIEW HTS.	1.19	4500	120	4620
U	01.19	EDGERTON RD.	.02	9930	300	10230
U	01.21	OHIO TURNPIKE	1.32	9930	300	10230
U	02.53	SR 82 (ROYALTON RD.)	2.07	11000	330	11330
U	04.60	AVERY RD.	.50	16600	500	17100

2007 CUYAHOGA CO 12
AVERAGE 24-HR TRAFFIC VOLUME

	SECT. BEGINS	TRAFFIC SECTION	SECT. LENGTH	PASS & A COM'L	B & C COM'L	TOTAL VEH.
		SR-174 (Cont'd)				
	03.82	EQUALS STA. 0.00 IN LAKE CO.	.00			
		SR-175				
U	00.00	SR 43 (AURORA RD.) IN SOLON	.32	3710	160	3870
U	00.32	RICHMOND RD. ENTER CANNON RD.	.29	7730	340	8070
U	00.61	CANNON RD. ENTER RICHMOND RD.	.27	14900	880	15780
U	00.88	E. CORP. BEDFORD HTS.	1.10	14900	880	15780
U	01.98	S. CORP. WARRENSVILLE HTS. MILES RD.	.35	16470	970	17440
U	02.33	US 422	.40	16470	970	17440
U	02.73	EMERY RD.	.09	14700	870	15570
U	02.82	IR 271	.92	9890	180	10070
U	03.74	S. CORP. BEACHWOOD	1.01	9890	180	10070
U	04.75	US 422 (CHAGRIN BLVD.)	.93	SEE PREFERRED ROUTE		
U	05.68	SR 87 (SHAKER BLVD.)	1.62	22370	210	22580
U	07.30	S. CORP. LYNDHURST CEDAR RD.	1.29	22370	210	22580
U	08.59	US 322 (MAYFIELD RD.)	1.24	15530	270	15800
U	09.83	S. CORP. RICHMOND HTS.	2.64	15530	270	15800
U	12.47	US 6 (CHARDON RD.)	.57	8270	100	8370
U	13.04	S. CORP. EUCLID	.39	8270	100	8370
U	13.43	US 20 (EUCLID AVE.)	.93	14630	380	15010
U	14.36	IR 90	1.34	6970	100	7070
	15.70	RTE ENDS SR 283 (LAKESHORE) IN EUCLID	.00			
		SR-176				
U	00.00	SUM. CO. LINE S. CORP. BROADVIEW HTS.	1.19	3880	80	3960
U	01.19	EDGERTON RD.	.02	9480	350	9830
U	01.21	OHIO TURNPIKE	1.32	9480	350	9830
U	02.53	SR 82 (ROYALTON RD.)	2.07	11230	410	11640
U	04.60	AVERY RD.	.50	17630	260	17890
U	05.10	S. CORP. PARMA	3.79	17630	260	17890
U	08.89	SNOW RD.	.99	26400	340	26740
U	09.88	SR 17 (BROOKPARK RD.) IN CLEVELAND	.25	SEE PREFERRED ROUTE		
U	10.13	SR 17 (BROOKPARK RD.)	.07	11210	790	12000
U	10.20	IR 480	1.15	73380	3100	76480
U	11.35	SPRING RD.	.46	71990	3030	75020
U	11.81	ATR # 593	.86	71990	3030	75020
U	12.67	DENISON AVE.	.19	68600	2740	71340
U	12.86	JENNINGS RD. RAMPS	.97	71570	3290	74860
	13.83	ROUTE ENDS AT IR 71 IN CLEVELAND	.00			

Appendix B
No-Build Capacity Analysis

Lanes, Volumes, Timings
3: RICHMOND ROAD & CEDAR ROAD

6/27/2013

Lane Group	EBL	EBT	EBR	WBL	WBT	WBR	NBL	NBT	NBR	SBL	SBT	SBR
Lane Configurations												
Volume (vph)	192	1063	145	94	1278	489	261	671	70	404	559	181
Ideal Flow (vphpl)	1900	1900	1900	1900	1900	1900	1900	1900	1900	1900	1900	1900
Storage Length (ft)	850		0	280		0	230		0	220		220
Storage Lanes	1		0	1		1	1		0	2		1
Taper Length (ft)	25			25			25			25		
Satd. Flow (prot)	1770	3476	0	1770	3539	1583	1770	3490	0	3433	3539	1583
Flt Permitted	0.074			0.078			0.148			0.950		
Satd. Flow (perm)	138	3476	0	145	3539	1583	276	3490	0	3433	3539	1583
Right Turn on Red			Yes			Yes			Yes			Yes
Satd. Flow (RTOR)		16				394		8				146
Link Speed (mph)		30			30			30			30	
Link Distance (ft)		977			434			462			477	
Travel Time (s)		22.2			9.9			10.5			10.8	
Peak Hour Factor	0.92	0.92	0.92	0.92	0.92	0.92	0.92	0.92	0.92	0.92	0.92	0.92
Shared Lane Traffic (%)												
Lane Group Flow (vph)	209	1313	0	102	1389	532	284	805	0	439	608	197
Turn Type	pm+pt	NA		pm+pt	NA	Perm	pm+pt	NA		Prot	NA	Perm
Protected Phases	7	4		3	8		5	2		1	6	
Permitted Phases	4			8		8	2					6
Detector Phase	7	4		3	8	8	5	2		1	6	6
Switch Phase												
Minimum Initial (s)	4.0	4.0		4.0	4.0	4.0	4.0	4.0		4.0	4.0	4.0
Minimum Split (s)	8.0	20.0		8.0	20.0	20.0	8.0	20.0		8.0	20.0	20.0
Total Split (s)	14.0	58.0		11.0	55.0	55.0	23.0	31.0		20.0	28.0	28.0
Total Split (%)	11.7%	48.3%		9.2%	45.8%	45.8%	19.2%	25.8%		16.7%	23.3%	23.3%
Maximum Green (s)	10.0	54.0		7.0	51.0	51.0	19.0	27.0		16.0	24.0	24.0
Yellow Time (s)	3.5	3.5		3.5	3.5	3.5	3.5	3.5		3.5	3.5	3.5
All-Red Time (s)	0.5	0.5		0.5	0.5	0.5	0.5	0.5		0.5	0.5	0.5
Lost Time Adjust (s)	0.0	0.0		0.0	0.0	0.0	0.0	0.0		0.0	0.0	0.0
Total Lost Time (s)	4.0	4.0		4.0	4.0	4.0	4.0	4.0		4.0	4.0	4.0
Lead/Lag	Lead	Lag		Lead	Lag	Lag	Lead	Lag		Lead	Lag	Lag
Lead-Lag Optimize?												
Vehicle Extension (s)	3.0	3.0		3.0	3.0	3.0	3.0	3.0		3.0	3.0	3.0
Recall Mode	None	C-Min		None	C-Min	C-Min	None	None		None	None	None
Walk Time (s)		5.0			5.0	5.0		5.0			5.0	5.0
Flash Dont Walk (s)		11.0			11.0	11.0		11.0			11.0	11.0
Pedestrian Calls (#/hr)		0			0	0		0			0	0
Act Effct Green (s)	64.1	54.1		57.9	51.0	51.0	44.9	27.0		16.0	25.1	25.1
Actuated g/C Ratio	0.53	0.45		0.48	0.42	0.42	0.37	0.22		0.13	0.21	0.21
v/c Ratio	1.00	0.83		0.63	0.92	0.59	0.87	1.02		0.96	0.82	0.44
Control Delay	92.6	34.5		35.1	48.0	15.7	50.3	76.8		85.3	55.9	15.9
Queue Delay	0.0	0.0		0.0	0.0	0.0	0.0	0.0		0.0	0.0	0.0
Total Delay	92.6	34.5		35.1	48.0	15.7	50.3	76.8		85.3	55.9	15.9
LOS	F	C		D	D	B	D	E		F	E	B
Approach Delay		42.4			38.9			69.9			59.9	
Approach LOS		D			D			E			E	

Intersection Summary	
Area Type:	Other

Cycle Length: 120	
Actuated Cycle Length: 120	
Offset: 75 (63%), Referenced to phase 4:EBTL and 8:WBTL, Start of Yellow	
Natural Cycle: 90	
Control Type: Actuated-Coordinated	
Maximum v/c Ratio: 1.02	
Intersection Signal Delay: 50.0	Intersection LOS: D
Intersection Capacity Utilization 91.6%	ICU Level of Service F
Analysis Period (min) 15	

Splits and Phases: 3: RICHMOND ROAD & CEDAR ROAD

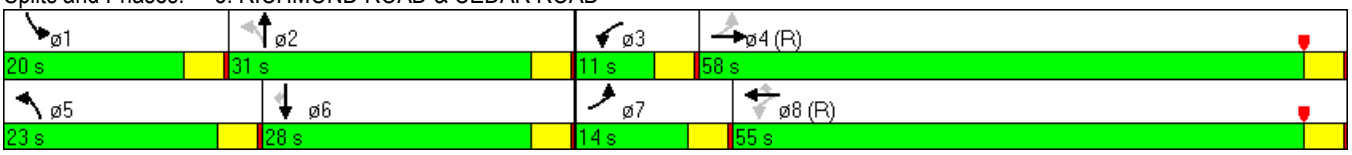

Lane Group	WBL	WBR	NBT	NBR	SBL	SBT
Lane Configurations						
Volume (vph)	286	142	886	319	138	664
Ideal Flow (vphpl)	1900	1900	1900	1900	1900	1900
Storage Length (ft)	0	225		0	100	
Storage Lanes	2	1		0	1	
Taper Length (ft)	25				25	
Satd. Flow (prot)	3433	1583	3398	0	1770	3539
Flt Permitted	0.950				0.155	
Satd. Flow (perm)	3433	1583	3398	0	289	3539
Right Turn on Red		Yes		Yes		
Satd. Flow (RTOR)		154	75			
Link Speed (mph)	30		30			30
Link Distance (ft)	820		426			71
Travel Time (s)	18.6		9.7			1.6
Peak Hour Factor	0.92	0.92	0.92	0.92	0.92	0.92
Shared Lane Traffic (%)						
Lane Group Flow (vph)	311	154	1310	0	150	722
Turn Type	NA	Perm	NA		pm+pt	NA
Protected Phases	8		2		1	6
Permitted Phases		8			6	
Detector Phase	8	8	2		1	6
Switch Phase						
Minimum Initial (s)	4.0	4.0	4.0		4.0	4.0
Minimum Split (s)	20.0	20.0	20.0		8.0	20.0
Total Split (s)	25.0	25.0	75.0		20.0	95.0
Total Split (%)	20.8%	20.8%	62.5%		16.7%	79.2%
Maximum Green (s)	21.0	21.0	71.0		16.0	91.0
Yellow Time (s)	3.5	3.5	3.5		3.5	3.5
All-Red Time (s)	0.5	0.5	0.5		0.5	0.5
Lost Time Adjust (s)	0.0	0.0	0.0		0.0	0.0
Total Lost Time (s)	4.0	4.0	4.0		4.0	4.0
Lead/Lag			Lag		Lead	
Lead-Lag Optimize?						
Vehicle Extension (s)	3.0	3.0	3.0		3.0	3.0
Recall Mode	None	None	C-Min		None	C-Min
Walk Time (s)	5.0	5.0	5.0			5.0
Flash Dont Walk (s)	11.0	11.0	11.0			11.0
Pedestrian Calls (#/hr)	0	0	0			0
Act Effct Green (s)	16.1	16.1	83.2		95.9	95.9
Actuated g/C Ratio	0.13	0.13	0.69		0.80	0.80
v/c Ratio	0.68	0.45	0.55		0.44	0.26
Control Delay	56.8	11.2	10.2		15.9	1.7
Queue Delay	0.0	0.0	0.0		0.0	0.0
Total Delay	56.8	11.2	10.2		15.9	1.7
LOS	E	B	B		B	A
Approach Delay	41.7		10.2			4.2
Approach LOS	D		B			A

Intersection Summary	
Area Type:	Other

Cycle Length: 120	
Actuated Cycle Length: 120	
Offset: 0 (0%), Referenced to phase 2:NBT and 6:SBTL, Start of Yellow	
Natural Cycle: 60	
Control Type: Actuated-Coordinated	
Maximum v/c Ratio: 0.68	
Intersection Signal Delay: 13.8	Intersection LOS: B
Intersection Capacity Utilization 60.5%	ICU Level of Service B
Analysis Period (min) 15	

Splits and Phases: 8: RICHMOND ROAD & GEORGE ZEIGER

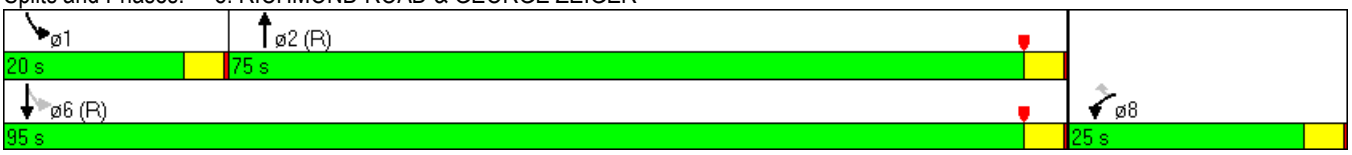

Lane Group	EBL	EBT	EBR	WBL	WBT	WBR	NBL	NBT	NBR	SBL	SBT	SBR
Lane Configurations												
Volume (vph)	20	1349	85	378	1707	0	126	7	420	3	0	13
Ideal Flow (vphpl)	1900	1900	1900	1900	1900	1900	1900	1900	1900	1900	1900	1900
Storage Length (ft)	100		500	400		0	0		125	0		0
Storage Lanes	1		1	1		0	1		1	1		0
Taper Length (ft)	25			25			25			25		
Satd. Flow (prot)	1770	3539	1583	1770	3539	0	1770	1513	1504	1770	1583	0
Flt Permitted	0.103			0.077			0.748			0.250		
Satd. Flow (perm)	192	3539	1583	143	3539	0	1393	1513	1504	466	1583	0
Right Turn on Red			Yes			Yes			Yes			Yes
Satd. Flow (RTOR)			92					139	55		82	
Link Speed (mph)		30			30			30			30	
Link Distance (ft)		1168			845			360			225	
Travel Time (s)		26.5			19.2			8.2			5.1	
Peak Hour Factor	0.92	0.92	0.92	0.92	0.92	0.92	0.92	0.92	0.92	0.92	0.92	0.92
Shared Lane Traffic (%)									49%			
Lane Group Flow (vph)	22	1466	92	411	1855	0	137	232	233	3	14	0
Turn Type	pm+pt	NA	Perm	pm+pt	NA		Perm	NA	pm+ov	Perm	NA	
Protected Phases	7	4		3	8			2	3		6	
Permitted Phases	4		4	8			2		2	6		
Detector Phase	7	4	4	3	8		2	2	3	6	6	
Switch Phase												
Minimum Initial (s)	4.0	4.0	4.0	4.0	4.0		4.0	4.0	4.0	4.0	4.0	
Minimum Split (s)	8.0	20.0	20.0	8.0	20.0		20.0	20.0	8.0	20.0	20.0	
Total Split (s)	8.0	83.0	83.0	15.0	90.0		22.0	22.0	15.0	22.0	22.0	
Total Split (%)	6.7%	69.2%	69.2%	12.5%	75.0%		18.3%	18.3%	12.5%	18.3%	18.3%	
Maximum Green (s)	4.0	79.0	79.0	11.0	86.0		18.0	18.0	11.0	18.0	18.0	
Yellow Time (s)	3.5	3.5	3.5	3.5	3.5		3.5	3.5	3.5	3.5	3.5	
All-Red Time (s)	0.5	0.5	0.5	0.5	0.5		0.5	0.5	0.5	0.5	0.5	
Lost Time Adjust (s)	0.0	0.0	0.0	0.0	0.0		0.0	0.0	0.0	0.0	0.0	
Total Lost Time (s)	4.0	4.0	4.0	4.0	4.0		4.0	4.0	4.0	4.0	4.0	
Lead/Lag	Lead	Lag	Lag	Lead	Lag				Lead			
Lead-Lag Optimize?												
Vehicle Extension (s)	3.0	3.0	3.0	3.0	3.0		3.0	3.0	3.0	3.0	3.0	
Recall Mode	None	C-Min	C-Min	None	C-Min		None	None	None	None	None	
Walk Time (s)		5.0	5.0		5.0		5.0	5.0		5.0	5.0	
Flash Dont Walk (s)		11.0	11.0		11.0		11.0	11.0		11.0	11.0	
Pedestrian Calls (#/hr)		0	0		0		0	0		0	0	
Act Effct Green (s)	71.5	66.5	66.5	96.0	90.9		16.0	16.0	45.5	16.0	16.0	
Actuated g/C Ratio	0.60	0.55	0.55	0.80	0.76		0.13	0.13	0.38	0.13	0.13	
v/c Ratio	0.12	0.75	0.10	0.89	0.69		0.74	0.72	0.39	0.05	0.05	
Control Delay	5.7	15.2	2.4	55.4	10.3		69.5	31.1	19.7	45.7	0.3	
Queue Delay	0.0	0.0	0.0	0.0	0.0		0.0	0.1	0.8	0.0	0.0	
Total Delay	5.7	15.2	2.4	55.4	10.3		69.5	31.2	20.4	45.7	0.3	
LOS	A	B	A	E	B		E	C	C	D	A	
Approach Delay		14.3			18.5			35.8			8.3	
Approach LOS		B			B			D			A	

Intersection Summary	
Area Type:	Other

Cycle Length: 120	
Actuated Cycle Length: 120	
Offset: 116 (97%), Referenced to phase 4:EBTL and 8:WBTL, Start of Yellow	
Natural Cycle: 80	
Control Type: Actuated-Coordinated	
Maximum v/c Ratio: 0.89	
Intersection Signal Delay: 19.3	Intersection LOS: B
Intersection Capacity Utilization 81.9%	ICU Level of Service D
Analysis Period (min) 15	

Splits and Phases: 10: GEORGE ZEIGER & CEDAR ROAD

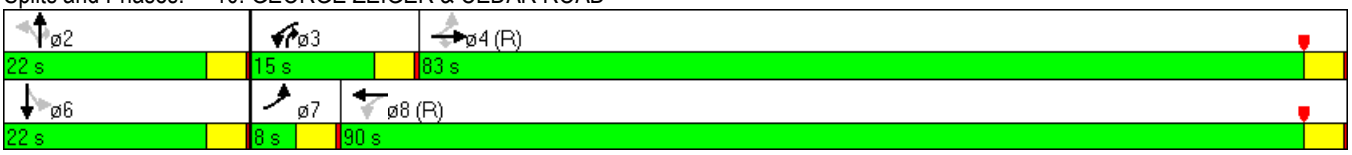

Lane Group	EBL	EBT	WBT	WBR	SBL	SBR
Lane Configurations						
Volume (vph)	180	246	237	24	59	215
Ideal Flow (vphpl)	1900	1900	1900	1900	1900	1900
Storage Length (ft)	200			200	0	0
Storage Lanes	1			1	1	1
Taper Length (ft)	25				25	
Satd. Flow (prot)	1770	3539	3539	1583	1770	1583
Flt Permitted	0.592				0.950	
Satd. Flow (perm)	1103	3539	3539	1583	1770	1583
Right Turn on Red				Yes		Yes
Satd. Flow (RTOR)				26		234
Link Speed (mph)		30	30		30	
Link Distance (ft)		400	611		228	
Travel Time (s)		9.1	13.9		5.2	
Peak Hour Factor	0.92	0.92	0.92	0.92	0.92	0.92
Shared Lane Traffic (%)						
Lane Group Flow (vph)	196	267	258	26	64	234
Turn Type	Perm	NA	NA	Perm	NA	Perm
Protected Phases		4	8		6	
Permitted Phases	4			8		6
Detector Phase	4	4	8	8	6	6
Switch Phase						
Minimum Initial (s)	4.0	4.0	4.0	4.0	4.0	4.0
Minimum Split (s)	20.0	20.0	20.0	20.0	20.0	20.0
Total Split (s)	73.0	73.0	73.0	73.0	47.0	47.0
Total Split (%)	60.8%	60.8%	60.8%	60.8%	39.2%	39.2%
Maximum Green (s)	69.0	69.0	69.0	69.0	43.0	43.0
Yellow Time (s)	3.5	3.5	3.5	3.5	3.5	3.5
All-Red Time (s)	0.5	0.5	0.5	0.5	0.5	0.5
Lost Time Adjust (s)	0.0	0.0	0.0	0.0	0.0	0.0
Total Lost Time (s)	4.0	4.0	4.0	4.0	4.0	4.0
Lead/Lag						
Lead-Lag Optimize?						
Vehicle Extension (s)	3.0	3.0	3.0	3.0	3.0	3.0
Recall Mode	Min	Min	Min	Min	None	None
Walk Time (s)	5.0	5.0	5.0	5.0	5.0	5.0
Flash Dont Walk (s)	11.0	11.0	11.0	11.0	11.0	11.0
Pedestrian Calls (#/hr)	0	0	0	0	0	0
Act Effct Green (s)	12.8	12.8	12.8	12.8	6.8	6.8
Actuated g/C Ratio	0.46	0.46	0.46	0.46	0.25	0.25
v/c Ratio	0.39	0.16	0.16	0.03	0.15	0.41
Control Delay	7.8	4.8	4.8	2.4	9.0	4.3
Queue Delay	0.0	0.0	0.0	0.0	0.0	0.0
Total Delay	7.8	4.8	4.8	2.4	9.0	4.3
LOS	A	A	A	A	A	A
Approach Delay		6.1	4.6		5.3	
Approach LOS		A	A		A	

Intersection Summary	
Area Type:	Other

Cycle Length: 120	
Actuated Cycle Length: 27.7	
Natural Cycle: 40	
Control Type: Semi Act-Uncoord	
Maximum v/c Ratio: 0.41	
Intersection Signal Delay: 5.5	Intersection LOS: A
Intersection Capacity Utilization 29.9%	ICU Level of Service A
Analysis Period (min) 15	

Splits and Phases: 18: GEORGE ZEIGER & MALL DR 4

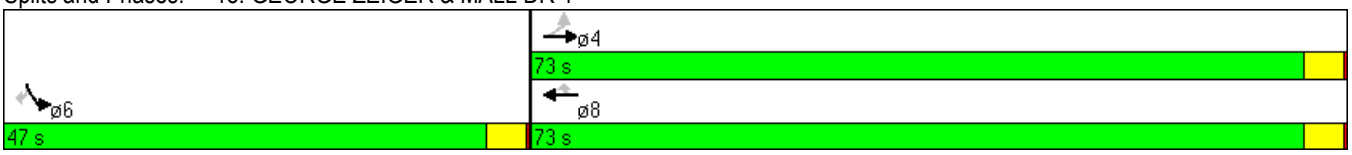

Lane Group	EBL	EBT	EBR	WBL	WBT	WBR	NBL	NBT	NBR	SBL	SBT	SBR
Lane Configurations												
Volume (vph)	157	0	13	37	0	71	5	325	15	15	299	149
Ideal Flow (vphpl)	1900	1900	1900	1900	1900	1900	1900	1900	1900	1900	1900	1900
Storage Length (ft)	0		0	0		0	100		0	100		100
Storage Lanes	1		1	1		0	1		0	1		1
Taper Length (ft)	25			25			25			25		
Satd. Flow (prot)	1681	1681	1583	1770	1583	0	1770	3514	0	1770	3539	1583
Flt Permitted	0.533	0.533		0.909			0.555			0.525		
Satd. Flow (perm)	943	943	1583	1693	1583	0	1034	3514	0	978	3539	1583
Right Turn on Red			Yes			Yes			Yes			Yes
Satd. Flow (RTOR)			82		489			5				162
Link Speed (mph)		30			30			30			30	
Link Distance (ft)		208			206			566			360	
Travel Time (s)		4.7			4.7			12.9			8.2	
Peak Hour Factor	0.92	0.92	0.92	0.92	0.92	0.92	0.92	0.92	0.92	0.92	0.92	0.92
Shared Lane Traffic (%)	50%											
Lane Group Flow (vph)	85	86	14	40	77	0	5	369	0	16	325	162
Turn Type	pm+pt	NA	Perm	pm+pt	NA		pm+pt	NA		pm+pt	NA	Perm
Protected Phases	7	4		3	8		5	2		1	6	
Permitted Phases	4		4	8			2			6		6
Detector Phase	7	4	4	3	8		5	2		1	6	6
Switch Phase												
Minimum Initial (s)	4.0	4.0	4.0	4.0	4.0		4.0	4.0		4.0	4.0	4.0
Minimum Split (s)	8.0	20.0	20.0	8.0	20.0		8.0	20.0		8.0	20.0	20.0
Total Split (s)	23.0	34.0	34.0	19.0	30.0		14.0	53.0		14.0	53.0	53.0
Total Split (%)	19.2%	28.3%	28.3%	15.8%	25.0%		11.7%	44.2%		11.7%	44.2%	44.2%
Maximum Green (s)	19.0	30.0	30.0	15.0	26.0		10.0	49.0		10.0	49.0	49.0
Yellow Time (s)	3.5	3.5	3.5	3.5	3.5		3.5	3.5		3.5	3.5	3.5
All-Red Time (s)	0.5	0.5	0.5	0.5	0.5		0.5	0.5		0.5	0.5	0.5
Lost Time Adjust (s)	0.0	0.0	0.0	0.0	0.0		0.0	0.0		0.0	0.0	0.0
Total Lost Time (s)	4.0	4.0	4.0	4.0	4.0		4.0	4.0		4.0	4.0	4.0
Lead/Lag	Lead	Lag	Lag	Lead	Lag		Lead	Lag		Lead	Lag	Lag
Lead-Lag Optimize?												
Vehicle Extension (s)	3.0	3.0	3.0	3.0	3.0		3.0	3.0		3.0	3.0	3.0
Recall Mode	None	None	None	None	None		None	C-Min		None	C-Min	C-Min
Walk Time (s)		5.0	5.0		5.0			5.0			5.0	5.0
Flash Dont Walk (s)		11.0	11.0		11.0			11.0			11.0	11.0
Pedestrian Calls (#/hr)		0	0		0			0			0	0
Act Effct Green (s)	18.2	18.3	9.1	12.0	5.5		93.8	92.3		94.9	94.4	94.4
Actuated g/C Ratio	0.15	0.15	0.08	0.10	0.05		0.78	0.77		0.79	0.79	0.79
v/c Ratio	0.40	0.42	0.07	0.23	0.14		0.01	0.14		0.02	0.12	0.13
Control Delay	48.9	49.6	0.7	44.4	0.5		4.2	5.6		2.9	3.2	0.3
Queue Delay	0.0	0.0	0.0	0.0	0.0		0.0	0.0		0.0	0.0	0.0
Total Delay	48.9	49.6	0.7	44.4	0.5		4.2	5.6		2.9	3.2	0.3
LOS	D	D	A	D	A		A	A		A	A	A
Approach Delay		45.6			15.5			5.5			2.2	
Approach LOS		D			B			A			A	

Intersection Summary	
Area Type:	Other

Cycle Length: 120	
Actuated Cycle Length: 120	
Offset: 0 (0%), Referenced to phase 2:NBTL and 6:SBTL, Start of Yellow	
Natural Cycle: 60	
Control Type: Actuated-Coordinated	
Maximum v/c Ratio: 0.42	
Intersection Signal Delay: 11.4	Intersection LOS: B
Intersection Capacity Utilization 30.1%	ICU Level of Service A
Analysis Period (min) 15	

Splits and Phases: 23: GEORGE ZEIGER & MALL DR 2/CLEVE CLINIC

Lane Group	EBT	EBR	WBL	WBT	NBL	NBR
Lane Configurations						
Volume (vph)	1342	187	97	1749	124	112
Ideal Flow (vphpl)	1900	1900	1900	1900	1900	1900
Storage Length (ft)		150	200		0	0
Storage Lanes		1	1		2	1
Taper Length (ft)			25		25	
Satd. Flow (prot)	3539	1583	1770	3539	3433	1583
Flt Permitted			0.140		0.950	
Satd. Flow (perm)	3539	1583	261	3539	3433	1583
Right Turn on Red		Yes				Yes
Satd. Flow (RTOR)		82				122
Link Speed (mph)	30			30	30	
Link Distance (ft)	331			1168	186	
Travel Time (s)	7.5			26.5	4.2	
Peak Hour Factor	0.92	0.92	0.92	0.92	0.92	0.92
Shared Lane Traffic (%)						
Lane Group Flow (vph)	1459	203	105	1901	135	122
Turn Type	NA	Free	pm+pt	NA	NA	Perm
Protected Phases	4		3	8	2	
Permitted Phases		Free	8			2
Detector Phase	4		3	8	2	2
Switch Phase						
Minimum Initial (s)	4.0		4.0	4.0	4.0	4.0
Minimum Split (s)	20.0		8.0	20.0	20.0	20.0
Total Split (s)	83.0		15.0	98.0	22.0	22.0
Total Split (%)	69.2%		12.5%	81.7%	18.3%	18.3%
Maximum Green (s)	79.0		11.0	94.0	18.0	18.0
Yellow Time (s)	3.5		3.5	3.5	3.5	3.5
All-Red Time (s)	0.5		0.5	0.5	0.5	0.5
Lost Time Adjust (s)	0.0		0.0	0.0	0.0	0.0
Total Lost Time (s)	4.0		4.0	4.0	4.0	4.0
Lead/Lag	Lag		Lead			
Lead-Lag Optimize?						
Vehicle Extension (s)	3.0		3.0	3.0	3.0	3.0
Recall Mode	C-Min		None	C-Min	None	None
Walk Time (s)	5.0			5.0	5.0	5.0
Flash Dont Walk (s)	11.0			11.0	11.0	11.0
Pedestrian Calls (#/hr)	0			0	0	0
Act Effct Green (s)	91.3	120.0	101.9	101.9	10.1	10.1
Actuated g/C Ratio	0.76	1.00	0.85	0.85	0.08	0.08
v/c Ratio	0.54	0.13	0.34	0.63	0.47	0.50
Control Delay	5.1	0.1	4.5	4.2	57.4	16.2
Queue Delay	0.1	0.0	0.0	0.0	0.0	0.0
Total Delay	5.2	0.1	4.5	4.2	57.4	16.2
LOS	A	A	A	A	E	B
Approach Delay	4.5			4.2	37.9	
Approach LOS	A			A	D	

Intersection Summary	
Area Type:	Other

Cycle Length: 120	
Actuated Cycle Length: 120	
Offset: 0 (0%), Referenced to phase 4:EBT and 8:WBTL, Start of Yellow	
Natural Cycle: 60	
Control Type: Actuated-Coordinated	
Maximum v/c Ratio: 0.63	
Intersection Signal Delay: 6.6	Intersection LOS: A
Intersection Capacity Utilization 58.6%	ICU Level of Service B
Analysis Period (min) 15	

Splits and Phases: 28: MALL DRIVE 1 & CEDAR ROAD

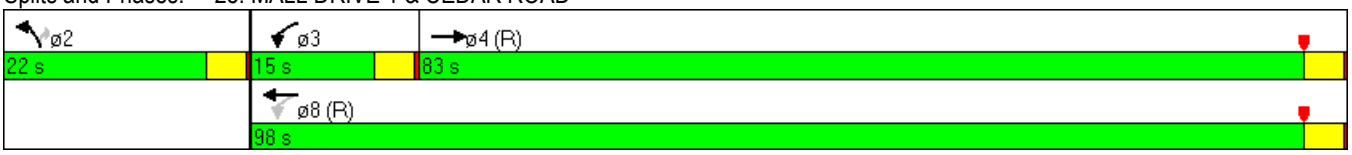

HCM Unsignalized Intersection Capacity Analysis
6: GEORGE ZEIGER & MALL DR 3

6/27/2013

Movement	EBL	EBR	NBL	NBT	SBT	SBR
Lane Configurations						
Volume (veh/h)	91	37	32	256	216	72
Sign Control	Stop			Free	Free	
Grade	0%			0%	0%	
Peak Hour Factor	0.92	0.92	0.92	0.92	0.92	0.92
Hourly flow rate (vph)	99	40	35	278	235	78
Pedestrians						
Lane Width (ft)						
Walking Speed (ft/s)						
Percent Blockage						
Right turn flare (veh)						
Median type				None	None	
Median storage veh)						
Upstream signal (ft)					1057	
pX, platoon unblocked						
vC, conflicting volume	483	157	313			
vC1, stage 1 conf vol						
vC2, stage 2 conf vol						
vCu, unblocked vol	483	157	313			
tC, single (s)	6.8	6.9	4.1			
tC, 2 stage (s)						
tF (s)	3.5	3.3	2.2			
p0 queue free %	80	95	97			
cM capacity (veh/h)	498	861	1244			

Direction, Lane #	EB 1	EB 2	NB 1	NB 2	SB 1	SB 2
Volume Total	99	40	128	186	157	157
Volume Left	99	0	35	0	0	0
Volume Right	0	40	0	0	0	78
cSH	498	861	1244	1700	1700	1700
Volume to Capacity	0.20	0.05	0.03	0.11	0.09	0.09
Queue Length 95th (ft)	18	4	2	0	0	0
Control Delay (s)	14.0	9.4	2.3	0.0	0.0	0.0
Lane LOS	B	A	A			
Approach Delay (s)	12.7		1.0		0.0	
Approach LOS	B					

Intersection Summary			
Average Delay	2.7		
Intersection Capacity Utilization	31.3%	ICU Level of Service	A
Analysis Period (min)	15		

Movement	EBL	EBR	NBL	NBT	SBT	SBR
Lane Configurations						
Volume (veh/h)	266	39	24	22	16	237
Sign Control	Free			Stop	Stop	
Grade	0%			0%	0%	
Peak Hour Factor	0.92	0.92	0.92	0.92	0.92	0.92
Hourly flow rate (vph)	289	42	26	24	17	258
Pedestrians						
Lane Width (ft)						
Walking Speed (ft/s)						
Percent Blockage						
Right turn flare (veh)						
Median type	None					
Median storage veh)						
Upstream signal (ft)	611					
pX, platoon unblocked						
vC, conflicting volume	0		866	599	621	0
vC1, stage 1 conf vol						
vC2, stage 2 conf vol						
vCu, unblocked vol	0		866	599	621	0
tC, single (s)	4.1		7.1	6.5	6.5	6.2
tC, 2 stage (s)						
tF (s)	2.2		3.5	4.0	4.0	3.3
p0 queue free %	82		85	93	95	76
cM capacity (veh/h)	1623		173	341	332	1085

Direction, Lane #	EB 1	EB 2	NB 1	SB 1	SB 2
Volume Total	193	139	50	103	172
Volume Left	193	96	26	0	0
Volume Right	0	42	0	86	172
cSH	1623	1623	226	785	1085
Volume to Capacity	0.18	0.18	0.22	0.13	0.16
Queue Length 95th (ft)	16	16	20	11	14
Control Delay (s)	7.7	5.8	25.3	10.3	8.9
Lane LOS	A	A	D	B	A
Approach Delay (s)	6.9		25.3	9.4	
Approach LOS			D	A	

Intersection Summary			
Average Delay	9.4		
Intersection Capacity Utilization	24.6%	ICU Level of Service	A
Analysis Period (min)	15		

Movement	EBL	EBR	NBL	NBT	SBT	SBR
Lane Configurations						
Volume (veh/h)	0	4	4	989	790	8
Sign Control	Stop			Free	Free	
Grade	0%			0%	0%	
Peak Hour Factor	0.92	0.92	0.92	0.92	0.92	0.92
Hourly flow rate (vph)	0	4	4	1075	859	9
Pedestrians						
Lane Width (ft)						
Walking Speed (ft/s)						
Percent Blockage						
Right turn flare (veh)						
Median type				None	None	
Median storage veh)						
Upstream signal (ft)				1090	692	
pX, platoon unblocked	0.88	0.85	0.85			
vC, conflicting volume	1409	434	867			
vC1, stage 1 conf vol						
vC2, stage 2 conf vol						
vCu, unblocked vol	852	0	485			
tC, single (s)	6.8	6.9	4.1			
tC, 2 stage (s)						
tF (s)	3.5	3.3	2.2			
p0 queue free %	100	100	100			
cM capacity (veh/h)	262	920	911			

Direction, Lane #	EB 1	NB 1	NB 2	SB 1	SB 2
Volume Total	4	363	717	572	295
Volume Left	0	4	0	0	0
Volume Right	4	0	0	0	9
cSH	920	911	1700	1700	1700
Volume to Capacity	0.00	0.00	0.42	0.34	0.17
Queue Length 95th (ft)	0	0	0	0	0
Control Delay (s)	8.9	0.2	0.0	0.0	0.0
Lane LOS	A	A			
Approach Delay (s)	8.9	0.1		0.0	
Approach LOS	A				

Intersection Summary			
Average Delay	0.0		
Intersection Capacity Utilization	40.1%	ICU Level of Service	A
Analysis Period (min)	15		

Movement	EBL	EBR	NBL	NBT	SBT	SBR
Lane Configurations						
Volume (veh/h)	22	63	57	971	739	55
Sign Control	Stop			Free	Free	
Grade	0%			0%	0%	
Peak Hour Factor	0.92	0.92	0.92	0.92	0.92	0.92
Hourly flow rate (vph)	24	68	62	1055	803	60
Pedestrians						
Lane Width (ft)						
Walking Speed (ft/s)						
Percent Blockage						
Right turn flare (veh)						
Median type				None	None	
Median storage veh)						
Upstream signal (ft)				560	1222	
pX, platoon unblocked	0.92	0.87	0.87			
vC, conflicting volume	1485	432	863			
vC1, stage 1 conf vol						
vC2, stage 2 conf vol						
vCu, unblocked vol	719	47	543			
tC, single (s)	6.8	6.9	4.1			
tC, 2 stage (s)						
tF (s)	3.5	3.3	2.2			
p0 queue free %	92	92	93			
cM capacity (veh/h)	311	881	889			

Direction, Lane #	EB 1	NB 1	NB 2	SB 1	SB 2
Volume Total	92	414	704	536	328
Volume Left	24	62	0	0	0
Volume Right	68	0	0	0	60
cSH	598	889	1700	1700	1700
Volume to Capacity	0.15	0.07	0.41	0.32	0.19
Queue Length 95th (ft)	14	6	0	0	0
Control Delay (s)	12.1	2.1	0.0	0.0	0.0
Lane LOS	B	A			
Approach Delay (s)	12.1	0.8		0.0	
Approach LOS	B				

Intersection Summary			
Average Delay	1.0		
Intersection Capacity Utilization	65.8%	ICU Level of Service	C
Analysis Period (min)	15		

Movement	EBT	EBR	WBL	WBT	NBL	NBR
Lane Configurations						
Volume (veh/h)	387	70	79	373	55	39
Sign Control	Free			Free	Stop	
Grade	0%			0%	0%	
Peak Hour Factor	0.92	0.92	0.92	0.92	0.92	0.92
Hourly flow rate (vph)	421	76	86	405	60	42
Pedestrians						
Lane Width (ft)						
Walking Speed (ft/s)						
Percent Blockage						
Right turn flare (veh)						
Median type	None			None		
Median storage veh)						
Upstream signal (ft)	820			400		
pX, platoon unblocked						
vC, conflicting volume			497		833	248
vC1, stage 1 conf vol						
vC2, stage 2 conf vol						
vCu, unblocked vol			497		833	248
tC, single (s)			4.1		6.8	6.9
tC, 2 stage (s)						
tF (s)			2.2		3.5	3.3
p0 queue free %			92		79	94
cM capacity (veh/h)			1063		282	752

Direction, Lane #	EB 1	EB 2	WB 1	WB 2	NB 1	NB 2
Volume Total	280	216	221	270	60	42
Volume Left	0	0	86	0	60	0
Volume Right	0	76	0	0	0	42
cSH	1700	1700	1063	1700	282	752
Volume to Capacity	0.16	0.13	0.08	0.16	0.21	0.06
Queue Length 95th (ft)	0	0	7	0	20	4
Control Delay (s)	0.0	0.0	3.8	0.0	21.1	10.1
Lane LOS			A		C	B
Approach Delay (s)	0.0		1.7		16.6	
Approach LOS					C	

Intersection Summary			
Average Delay	2.3		
Intersection Capacity Utilization	38.9%	ICU Level of Service	A
Analysis Period (min)	15		

Movement	WBL	WBR	NBT	NBR	SBL	SBT
Lane Configurations						
Volume (veh/h)	37	63	282	65	98	251
Sign Control	Stop		Free			Free
Grade	0%		0%			0%
Peak Hour Factor	0.92	0.92	0.92	0.92	0.92	0.92
Hourly flow rate (vph)	40	68	307	71	107	273
Pedestrians						
Lane Width (ft)						
Walking Speed (ft/s)						
Percent Blockage						
Right turn flare (veh)						
Median type			None			None
Median storage veh)						
Upstream signal (ft)						566
pX, platoon unblocked						
vC, conflicting volume	691	189			377	
vC1, stage 1 conf vol						
vC2, stage 2 conf vol						
vCu, unblocked vol	691	189			377	
tC, single (s)	6.8	6.9			4.1	
tC, 2 stage (s)						
tF (s)	3.5	3.3			2.2	
p0 queue free %	88	92			91	
cM capacity (veh/h)	344	821			1178	

Direction, Lane #	WB 1	WB 2	NB 1	NB 2	SB 1	SB 2	SB 3
Volume Total	40	68	204	173	107	136	136
Volume Left	40	0	0	0	107	0	0
Volume Right	0	68	0	71	0	0	0
cSH	344	821	1700	1700	1178	1700	1700
Volume to Capacity	0.12	0.08	0.12	0.10	0.09	0.08	0.08
Queue Length 95th (ft)	10	7	0	0	7	0	0
Control Delay (s)	16.8	9.8	0.0	0.0	8.4	0.0	0.0
Lane LOS	C	A			A		
Approach Delay (s)	12.4		0.0		2.3		
Approach LOS	B						

Intersection Summary			
Average Delay	2.6		
Intersection Capacity Utilization	28.6%	ICU Level of Service	A
Analysis Period (min)	15		

Movement	EBT	EBR	WBL	WBT	NBL	NBR
Lane Configurations						
Volume (veh/h)	1502	35	18	1855	6	27
Sign Control	Free			Free	Stop	
Grade	0%			0%	0%	
Peak Hour Factor	0.92	0.92	0.92	0.92	0.92	0.92
Hourly flow rate (vph)	1633	38	20	2016	7	29
Pedestrians						
Lane Width (ft)						
Walking Speed (ft/s)						
Percent Blockage						
Right turn flare (veh)						
Median type	None			None		
Median storage veh)						
Upstream signal (ft)	434			331		
pX, platoon unblocked			0.67		0.78	0.67
vC, conflicting volume			1671		2699	835
vC1, stage 1 conf vol						
vC2, stage 2 conf vol						
vCu, unblocked vol			1029		1359	0
tC, single (s)			4.1		6.8	6.9
tC, 2 stage (s)						
tF (s)			2.2		3.5	3.3
p0 queue free %			96		94	96
cM capacity (veh/h)			452		105	731

Direction, Lane #	EB 1	EB 2	WB 1	WB 2	WB 3	NB 1	NB 2
Volume Total	1088	582	20	1008	1008	7	29
Volume Left	0	0	20	0	0	7	0
Volume Right	0	38	0	0	0	0	29
cSH	1700	1700	452	1700	1700	105	731
Volume to Capacity	0.64	0.34	0.04	0.59	0.59	0.06	0.04
Queue Length 95th (ft)	0	0	3	0	0	5	3
Control Delay (s)	0.0	0.0	13.3	0.0	0.0	41.6	10.1
Lane LOS			B			E	B
Approach Delay (s)	0.0		0.1			15.8	
Approach LOS						C	

Intersection Summary			
Average Delay	0.2		
Intersection Capacity Utilization	61.3%	ICU Level of Service	B
Analysis Period (min)	15		

Movement	WBL	WBR	NBT	NBR	SBL	SBT
Lane Configurations						
Volume (veh/h)	34	65	937	52	34	764
Sign Control	Stop		Free			Free
Grade	0%		0%			0%
Peak Hour Factor	0.92	0.92	0.92	0.92	0.92	0.92
Hourly flow rate (vph)	37	71	1018	57	37	830
Pedestrians						
Lane Width (ft)						
Walking Speed (ft/s)						
Percent Blockage						
Right turn flare (veh)						
Median type			None			None
Median storage veh)						
Upstream signal (ft)						462
pX, platoon unblocked	0.84					
vC, conflicting volume	1536	538			1075	
vC1, stage 1 conf vol						
vC2, stage 2 conf vol						
vCu, unblocked vol	1255	538			1075	
tC, single (s)	6.8	6.9			4.1	
tC, 2 stage (s)						
tF (s)	3.5	3.3			2.2	
p0 queue free %	71	86			94	
cM capacity (veh/h)	129	488			644	

Direction, Lane #	WB 1	WB 2	NB 1	NB 2	SB 1	SB 2
Volume Total	37	71	679	396	314	554
Volume Left	37	0	0	0	37	0
Volume Right	0	71	0	57	0	0
cSH	129	488	1700	1700	644	1700
Volume to Capacity	0.29	0.14	0.40	0.23	0.06	0.33
Queue Length 95th (ft)	27	13	0	0	5	0
Control Delay (s)	43.6	13.6	0.0	0.0	1.9	0.0
Lane LOS	E	B			A	
Approach Delay (s)	23.9		0.0		0.7	
Approach LOS	C					

Intersection Summary			
Average Delay	1.6		
Intersection Capacity Utilization	56.1%	ICU Level of Service	B
Analysis Period (min)	15		

Movement	EBL	EBT	EBR	WBL	WBT	WBR	NBL	NBT	NBR	SBL	SBT	SBR
Lane Configurations												
Volume (veh/h)	26	20	44	2	10	36	24	132	10	36	140	38
Sign Control		Stop			Stop			Free			Free	
Grade		0%			0%			0%			0%	
Peak Hour Factor	0.92	0.92	0.92	0.92	0.92	0.92	0.92	0.92	0.92	0.92	0.92	0.92
Hourly flow rate (vph)	28	22	48	2	11	39	26	143	11	39	152	41
Pedestrians												
Lane Width (ft)												
Walking Speed (ft/s)												
Percent Blockage												
Right turn flare (veh)												
Median type								None			None	
Median storage veh)												
Upstream signal (ft)												
pX, platoon unblocked												
vC, conflicting volume	497	458	173	511	473	149	193			154		
vC1, stage 1 conf vol												
vC2, stage 2 conf vol												
vCu, unblocked vol	497	458	173	511	473	149	193			154		
tC, single (s)	7.1	6.5	6.2	7.1	6.5	6.2	4.1			4.1		
tC, 2 stage (s)												
tF (s)	3.5	4.0	3.3	3.5	4.0	3.3	2.2			2.2		
p0 queue free %	94	95	95	99	98	96	98			97		
cM capacity (veh/h)	438	477	871	417	467	898	1380			1426		

Direction, Lane #	EB 1	WB 1	NB 1	SB 1
Volume Total	98	52	180	233
Volume Left	28	2	26	39
Volume Right	48	39	11	41
cSH	593	724	1380	1426
Volume to Capacity	0.16	0.07	0.02	0.03
Queue Length 95th (ft)	15	6	1	2
Control Delay (s)	12.3	10.4	1.2	1.5
Lane LOS	B	B	A	A
Approach Delay (s)	12.3	10.4	1.2	1.5
Approach LOS	B	B		

Intersection Summary				
Average Delay		4.1		
Intersection Capacity Utilization		34.9%	ICU Level of Service	A
Analysis Period (min)		15		

Appendix C
Build Capacity Analysis

Lanes, Volumes, Timings
3: RICHMOND ROAD & CEDAR ROAD

7/1/2013

Lane Group	EBL	EBT	EBR	WBL	WBT	WBR	NBL	NBT	NBR	SBL	SBT	SBR
Lane Configurations												
Volume (vph)	192	1082	147	94	1301	491	262	680	70	408	564	181
Ideal Flow (vphpl)	1900	1900	1900	1900	1900	1900	1900	1900	1900	1900	1900	1900
Storage Length (ft)	850		0	280		0	230		0	220		220
Storage Lanes	1		0	1		1	1		0	2		1
Taper Length (ft)	25			25			25			25		
Satd. Flow (prot)	1770	3476	0	1770	3539	1583	1770	3490	0	3433	3539	1583
Flt Permitted	0.073			0.077			0.143			0.950		
Satd. Flow (perm)	136	3476	0	143	3539	1583	266	3490	0	3433	3539	1583
Right Turn on Red			Yes			Yes			Yes			Yes
Satd. Flow (RTOR)		16				363		8				143
Link Speed (mph)		30			30			30			30	
Link Distance (ft)		977			434			462			477	
Travel Time (s)		22.2			9.9			10.5			10.8	
Peak Hour Factor	0.92	0.92	0.92	0.92	0.92	0.92	0.92	0.92	0.92	0.92	0.92	0.92
Shared Lane Traffic (%)												
Lane Group Flow (vph)	209	1336	0	102	1414	534	285	815	0	443	613	197
Turn Type	pm+pt	NA		pm+pt	NA	Perm	pm+pt	NA		Prot	NA	Perm
Protected Phases	7	4		3	8		5	2		1	6	
Permitted Phases	4			8		8	2					6
Detector Phase	7	4		3	8	8	5	2		1	6	6
Switch Phase												
Minimum Initial (s)	4.0	4.0		4.0	4.0	4.0	4.0	4.0		4.0	4.0	4.0
Minimum Split (s)	8.0	20.0		8.0	20.0	20.0	8.0	20.0		8.0	20.0	20.0
Total Split (s)	14.0	59.0		11.0	56.0	56.0	23.0	32.0		18.0	27.0	27.0
Total Split (%)	11.7%	49.2%		9.2%	46.7%	46.7%	19.2%	26.7%		15.0%	22.5%	22.5%
Yellow Time (s)	3.5	3.5		3.5	3.5	3.5	3.5	3.5		3.5	3.5	3.5
All-Red Time (s)	0.5	0.5		0.5	0.5	0.5	0.5	0.5		0.5	0.5	0.5
Lost Time Adjust (s)	0.0	0.0		0.0	0.0	0.0	0.0	0.0		0.0	0.0	0.0
Total Lost Time (s)	4.0	4.0		4.0	4.0	4.0	4.0	4.0		4.0	4.0	4.0
Lead/Lag	Lead	Lag		Lead	Lag	Lag	Lead	Lag		Lead	Lag	Lag
Lead-Lag Optimize?												
Recall Mode	None	C-Min		None	C-Min	C-Min	None	None		None	None	None
Act Effct Green (s)	65.1	55.1		58.9	52.0	52.0	45.3	28.0		14.0	24.1	24.1
Actuated g/C Ratio	0.54	0.46		0.49	0.43	0.43	0.38	0.23		0.12	0.20	0.20
v/c Ratio	1.00	0.83		0.62	0.92	0.60	0.88	0.99		1.11	0.86	0.46
Control Delay	92.6	33.8		34.0	47.7	17.0	52.3	68.9		125.9	60.3	17.0
Queue Delay	0.0	0.0		0.0	0.0	0.0	0.0	0.0		0.0	0.0	0.0
Total Delay	92.6	33.8		34.0	47.7	17.0	52.3	68.9		125.9	60.3	17.0
LOS	F	C		C	D	B	D	E		F	E	B
Approach Delay		41.8			39.0			64.6			76.7	
Approach LOS		D			D			E			E	

Intersection Summary

Area Type: Other

Cycle Length: 120

Actuated Cycle Length: 120

Offset: 75 (63%), Referenced to phase 4:EBTL and 8:WBTL, Start of Yellow

Natural Cycle: 90

Control Type: Actuated-Coordinated

Maximum v/c Ratio: 1.11	
Intersection Signal Delay: 52.4	Intersection LOS: D
Intersection Capacity Utilization 92.6%	ICU Level of Service F
Analysis Period (min) 15	

Splits and Phases: 3: RICHMOND ROAD & CEDAR ROAD

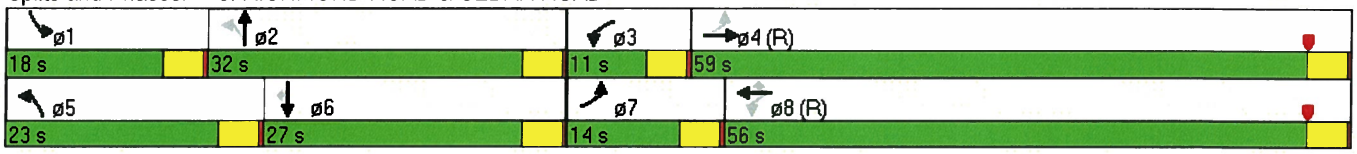

Lane Group	WBL	WBR	NBT	NBR	SBL	SBT
Lane Configurations						
Volume (vph)	309	153	886	339	146	664
Ideal Flow (vphpl)	1900	1900	1900	1900	1900	1900
Storage Length (ft)	0	225		0	100	
Storage Lanes	2	1		0	1	
Taper Length (ft)	25				25	
Satd. Flow (prot)	3433	1583	3394	0	1770	3539
Flt Permitted	0.950				0.147	
Satd. Flow (perm)	3433	1583	3394	0	274	3539
Right Turn on Red		Yes		Yes		
Satd. Flow (RTOR)		166	81			
Link Speed (mph)	30		30			30
Link Distance (ft)	820		426			71
Travel Time (s)	18.6		9.7			1.6
Peak Hour Factor	0.92	0.92	0.92	0.92	0.92	0.92
Shared Lane Traffic (%)						
Lane Group Flow (vph)	336	166	1331	0	159	722
Turn Type	NA	Perm	NA		pm+pt	NA
Protected Phases	8		2		1	6
Permitted Phases		8			6	
Detector Phase	8	8	2		1	6
Switch Phase						
Minimum Initial (s)	4.0	4.0	4.0		4.0	4.0
Minimum Split (s)	20.0	20.0	20.0		8.0	20.0
Total Split (s)	25.0	25.0	75.0		20.0	95.0
Total Split (%)	20.8%	20.8%	62.5%		16.7%	79.2%
Yellow Time (s)	3.5	3.5	3.5		3.5	3.5
All-Red Time (s)	0.5	0.5	0.5		0.5	0.5
Lost Time Adjust (s)	0.0	0.0	0.0		0.0	0.0
Total Lost Time (s)	4.0	4.0	4.0		4.0	4.0
Lead/Lag			Lag		Lead	
Lead-Lag Optimize?						
Recall Mode	None	None	C-Min		None	C-Min
Act Effct Green (s)	17.1	17.1	81.8		94.9	94.9
Actuated g/C Ratio	0.14	0.14	0.68		0.79	0.79
v/c Ratio	0.69	0.45	0.57		0.48	0.26
Control Delay	56.1	10.6	11.1		15.3	1.6
Queue Delay	0.0	0.0	0.0		0.0	0.0
Total Delay	56.1	10.6	11.1		15.3	1.6
LOS	E	B	B		B	A
Approach Delay	41.1		11.1			4.1
Approach LOS	D		B			A

Intersection Summary	
Area Type:	Other
Cycle Length: 120	
Actuated Cycle Length: 120	
Offset: 0 (0%), Referenced to phase 2:NBT and 6:SBTL, Start of Yellow	
Natural Cycle: 60	
Control Type: Actuated-Coordinated	

Maximum v/c Ratio: 0.69	
Intersection Signal Delay: 14.4	Intersection LOS: B
Intersection Capacity Utilization 62.2%	ICU Level of Service B
Analysis Period (min) 15	

Splits and Phases: 8: RICHMOND ROAD & GEORGE ZEIGER

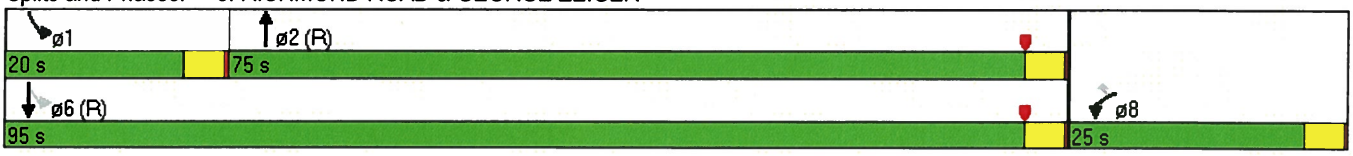

Lane Group	EBL	EBT	EBR	WBL	WBT	WBR	NBL	NBT	NBR	SBL	SBT	SBR
Lane Configurations												
Volume (vph)	20	1363	85	407	1719	0	136	7	449	3	0	13
Ideal Flow (vphpl)	1900	1900	1900	1900	1900	1900	1900	1900	1900	1900	1900	1900
Storage Length (ft)	100		500	400		0	0		125	0		0
Storage Lanes	1		1	1		0	1		1	1		0
Taper Length (ft)	25			25			25			25		
Satd. Flow (prot)	1770	3539	1583	1770	3539	0	1770	1513	1504	1770	1583	0
Flt Permitted	0.099			0.077			0.748			0.250		
Satd. Flow (perm)	184	3539	1583	143	3539	0	1393	1513	1504	466	1583	0
Right Turn on Red			Yes			Yes			Yes			Yes
Satd. Flow (RTOR)			92					189	45		82	
Link Speed (mph)		30			30			30			30	
Link Distance (ft)		1168			845			360			225	
Travel Time (s)		26.5			19.2			8.2			5.1	
Peak Hour Factor	0.92	0.92	0.92	0.92	0.92	0.92	0.92	0.92	0.92	0.92	0.92	0.92
Shared Lane Traffic (%)									49%			
Lane Group Flow (vph)	22	1482	92	442	1868	0	148	247	249	3	14	0
Turn Type	pm+pt	NA	Perm	pm+pt	NA		Perm	NA	pm+ov	Perm	NA	
Protected Phases	7	4		3	8			2	3		6	
Permitted Phases	4		4	8			2		2	6		
Detector Phase	7	4	4	3	8		2	2	3	6	6	
Switch Phase												
Minimum Initial (s)	4.0	4.0	4.0	4.0	4.0		4.0	4.0	4.0	4.0	4.0	
Minimum Split (s)	8.0	20.0	20.0	8.0	20.0		20.0	20.0	8.0	20.0	20.0	
Total Split (s)	8.0	79.0	79.0	20.0	91.0		21.0	21.0	20.0	21.0	21.0	
Total Split (%)	6.7%	65.8%	65.8%	16.7%	75.8%		17.5%	17.5%	16.7%	17.5%	17.5%	
Yellow Time (s)	3.5	3.5	3.5	3.5	3.5		3.5	3.5	3.5	3.5	3.5	
All-Red Time (s)	0.5	0.5	0.5	0.5	0.5		0.5	0.5	0.5	0.5	0.5	
Lost Time Adjust (s)	0.0	0.0	0.0	0.0	0.0		0.0	0.0	0.0	0.0	0.0	
Total Lost Time (s)	4.0	4.0	4.0	4.0	4.0		4.0	4.0	4.0	4.0	4.0	
Lead/Lag	Lead	Lag	Lag	Lead	Lag				Lead			
Lead-Lag Optimize?												
Recall Mode	None	C-Min	C-Min	None	C-Min		None	None	None	None	None	
Act Effct Green (s)	72.3	67.3	67.3	96.0	90.9		16.0	16.0	44.7	16.0	16.0	
Actuated g/C Ratio	0.60	0.56	0.56	0.80	0.76		0.13	0.13	0.37	0.13	0.13	
v/c Ratio	0.12	0.75	0.10	0.98	0.70		0.80	0.68	0.42	0.05	0.05	
Control Delay	5.0	14.2	2.9	73.8	10.1		76.4	24.0	22.2	46.7	0.3	
Queue Delay	0.0	0.0	0.0	0.0	0.0		0.0	0.1	0.8	0.0	0.0	
Total Delay	5.0	14.2	2.9	73.8	10.1		76.4	24.1	23.0	46.7	0.3	
LOS	A	B	A	E	B		E	C	C	D	A	
Approach Delay		13.4			22.3			35.7			8.5	
Approach LOS		B			C			D			A	

Intersection Summary

Area Type: Other
Cycle Length: 120
Actuated Cycle Length: 120
Offset: 116 (97%), Referenced to phase 4:EBTL and 8:WBTL, Start of Yellow
Natural Cycle: 90
Control Type: Actuated-Coordinated

Maximum v/c Ratio: 0.98	
Intersection Signal Delay: 21.1	Intersection LOS: C
Intersection Capacity Utilization 84.4%	ICU Level of Service E
Analysis Period (min) 15	

Splits and Phases: 10: GEORGE ZEIGER & CEDAR ROAD

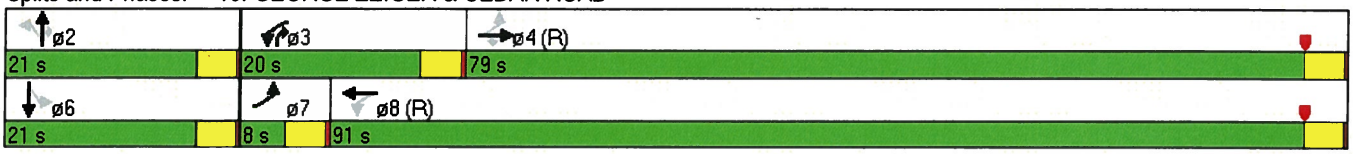

Lane Group	EBL	EBT	WBT	WBR	SBL	SBR
Lane Configurations						
Volume (vph)	203	251	244	26	66	242
Ideal Flow (vphpl)	1900	1900	1900	1900	1900	1900
Storage Length (ft)	200			200	0	0
Storage Lanes	1			1	1	1
Taper Length (ft)	25				25	
Satd. Flow (prot)	1770	3539	3539	1583	1770	1583
Flt Permitted	0.588				0.950	
Satd. Flow (perm)	1095	3539	3539	1583	1770	1583
Right Turn on Red				Yes		Yes
Satd. Flow (RTOR)				28		263
Link Speed (mph)		30	30		30	
Link Distance (ft)		400	611		228	
Travel Time (s)		9.1	13.9		5.2	
Peak Hour Factor	0.92	0.92	0.92	0.92	0.92	0.92
Shared Lane Traffic (%)						
Lane Group Flow (vph)	221	273	265	28	72	263
Turn Type	Perm	NA	NA	Perm	NA	Perm
Protected Phases		4	8		6	
Permitted Phases	4			8		6
Detector Phase	4	4	8	8	6	6
Switch Phase						
Minimum Initial (s)	4.0	4.0	4.0	4.0	4.0	4.0
Minimum Split (s)	20.0	20.0	20.0	20.0	20.0	20.0
Total Split (s)	73.0	73.0	73.0	73.0	47.0	47.0
Total Split (%)	60.8%	60.8%	60.8%	60.8%	39.2%	39.2%
Yellow Time (s)	3.5	3.5	3.5	3.5	3.5	3.5
All-Red Time (s)	0.5	0.5	0.5	0.5	0.5	0.5
Lost Time Adjust (s)	0.0	0.0	0.0	0.0	0.0	0.0
Total Lost Time (s)	4.0	4.0	4.0	4.0	4.0	4.0
Lead/Lag						
Lead-Lag Optimize?						
Recall Mode	Min	Min	Min	Min	None	None
Act Effct Green (s)	13.1	13.1	13.1	13.1	7.0	7.0
Actuated g/C Ratio	0.46	0.46	0.46	0.46	0.25	0.25
v/c Ratio	0.44	0.17	0.16	0.04	0.16	0.44
Control Delay	8.5	4.8	4.8	2.3	9.7	4.6
Queue Delay	0.0	0.0	0.0	0.0	0.0	0.0
Total Delay	8.5	4.8	4.8	2.3	9.7	4.6
LOS	A	A	A	A	A	A
Approach Delay		6.5	4.6		5.7	
Approach LOS		A	A		A	

Intersection Summary	
Area Type:	Other
Cycle Length: 120	
Actuated Cycle Length: 28.2	
Natural Cycle: 40	
Control Type: Semi Act-Uncoord	
Maximum v/c Ratio: 0.44	

Intersection Signal Delay: 5.7	Intersection LOS: A
Intersection Capacity Utilization 31.6%	ICU Level of Service A
Analysis Period (min) 15	

Splits and Phases: 18: GEORGE ZEIGER & MALL DR 4

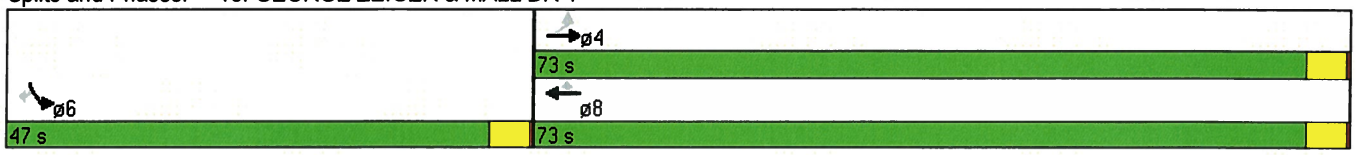

Lane Group	EBL	EBT	EBR	WBL	WBT	WBR	NBL	NBT	NBR	SBL	SBT	SBR
Lane Configurations												
Volume (vph)	177	0	15	37	0	71	6	344	15	15	310	167
Ideal Flow (vphpl)	1900	1900	1900	1900	1900	1900	1900	1900	1900	1900	1900	1900
Storage Length (ft)	0		0	0		0	100		0	100		100
Storage Lanes	1		1	1		0	1		0	1		1
Taper Length (ft)	25			25			25			25		
Satd. Flow (prot)	1681	1681	1583	1770	1583	0	1770	3518	0	1770	3539	1583
Flt Permitted	0.471	0.471		0.889			0.549			0.511		
Satd. Flow (perm)	833	833	1583	1656	1583	0	1023	3518	0	952	3539	1583
Right Turn on Red			Yes			Yes			Yes			Yes
Satd. Flow (RTOR)			82		460			4				182
Link Speed (mph)		30			30			30			30	
Link Distance (ft)		208			206			566			360	
Travel Time (s)		4.7			4.7			12.9			8.2	
Peak Hour Factor	0.92	0.92	0.92	0.92	0.92	0.92	0.92	0.92	0.92	0.92	0.92	0.92
Shared Lane Traffic (%)	50%											
Lane Group Flow (vph)	96	96	16	40	77	0	7	390	0	16	337	182
Turn Type	pm+pt	NA	Perm	pm+pt	NA		pm+pt	NA		pm+pt	NA	Perm
Protected Phases	7	4		3	8		5	2		1	6	
Permitted Phases	4		4	8			2			6		6
Detector Phase	7	4	4	3	8		5	2		1	6	6
Switch Phase												
Minimum Initial (s)	4.0	4.0	4.0	4.0	4.0		4.0	4.0		4.0	4.0	4.0
Minimum Split (s)	8.0	20.0	20.0	8.0	20.0		8.0	20.0		8.0	20.0	20.0
Total Split (s)	23.0	34.0	34.0	19.0	30.0		14.0	53.0		14.0	53.0	53.0
Total Split (%)	19.2%	28.3%	28.3%	15.8%	25.0%		11.7%	44.2%		11.7%	44.2%	44.2%
Yellow Time (s)	3.5	3.5	3.5	3.5	3.5		3.5	3.5		3.5	3.5	3.5
All-Red Time (s)	0.5	0.5	0.5	0.5	0.5		0.5	0.5		0.5	0.5	0.5
Lost Time Adjust (s)	0.0	0.0	0.0	0.0	0.0		0.0	0.0		0.0	0.0	0.0
Total Lost Time (s)	4.0	4.0	4.0	4.0	4.0		4.0	4.0		4.0	4.0	4.0
Lead/Lag	Lead	Lag	Lag	Lead	Lag		Lead	Lag		Lead	Lag	Lag
Lead-Lag Optimize?												
Recall Mode	None	None	None	None	None		None	C-Min		None	C-Min	C-Min
Act Effct Green (s)	19.4	19.4	9.9	12.0	5.5		90.8	88.4		91.7	90.5	90.5
Actuated g/C Ratio	0.16	0.16	0.08	0.10	0.05		0.76	0.74		0.76	0.75	0.75
v/c Ratio	0.44	0.44	0.08	0.23	0.15		0.01	0.15		0.02	0.13	0.15
Control Delay	49.1	49.1	0.7	43.7	0.6		4.5	6.0		2.7	3.0	0.1
Queue Delay	0.0	0.0	0.0	0.0	0.0		0.0	0.0		0.0	0.0	0.0
Total Delay	49.1	49.1	0.7	43.7	0.6		4.5	6.0		2.7	3.0	0.1
LOS	D	D	A	D	A		A	A		A	A	A
Approach Delay		45.4			15.3			6.0			2.0	
Approach LOS		D			B			A			A	

Intersection Summary

Area Type: Other
Cycle Length: 120
Actuated Cycle Length: 120
Offset: 0 (0%), Referenced to phase 2:NBTL and 6:SBTL, Start of Yellow
Natural Cycle: 60
Control Type: Actuated-Coordinated

Maximum v/c Ratio: 0.44	
Intersection Signal Delay: 11.7	Intersection LOS: B
Intersection Capacity Utilization 30.7%	ICU Level of Service A
Analysis Period (min) 15	

Splits and Phases: 23: GEORGE ZEIGER & MALL DR 2/CLEVE CLINIC

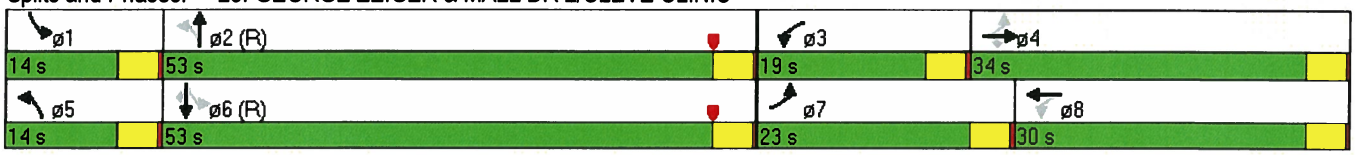

Lane Group	EBT	EBR	WBL	WBT	NBL	NBR
Lane Configurations						
Volume (vph)	1342	210	109	1759	139	126
Ideal Flow (vphpl)	1900	1900	1900	1900	1900	1900
Storage Length (ft)		150	200		0	0
Storage Lanes		1	1		2	1
Taper Length (ft)			25		25	
Satd. Flow (prot)	3539	1583	1770	3539	3433	1583
Flt Permitted			0.139		0.950	
Satd. Flow (perm)	3539	1583	259	3539	3433	1583
Right Turn on Red		Yes				Yes
Satd. Flow (RTOR)		82				137
Link Speed (mph)	30			30	30	
Link Distance (ft)	331			1168	186	
Travel Time (s)	7.5			26.5	4.2	
Peak Hour Factor	0.92	0.92	0.92	0.92	0.92	0.92
Shared Lane Traffic (%)						
Lane Group Flow (vph)	1459	228	118	1912	151	137
Turn Type	NA	Free	pm+pt	NA	NA	Perm
Protected Phases	4		3	8	2	
Permitted Phases		Free	8			2
Detector Phase	4		3	8	2	2
Switch Phase						
Minimum Initial (s)	4.0		4.0	4.0	4.0	4.0
Minimum Split (s)	20.0		8.0	20.0	20.0	20.0
Total Split (s)	83.0		15.0	98.0	22.0	22.0
Total Split (%)	69.2%		12.5%	81.7%	18.3%	18.3%
Yellow Time (s)	3.5		3.5	3.5	3.5	3.5
All-Red Time (s)	0.5		0.5	0.5	0.5	0.5
Lost Time Adjust (s)	0.0		0.0	0.0	0.0	0.0
Total Lost Time (s)	4.0		4.0	4.0	4.0	4.0
Lead/Lag	Lag		Lead			
Lead-Lag Optimize?						
Recall Mode	C-Min		None	C-Min	None	None
Act Effct Green (s)	90.4	120.0	101.4	101.4	10.6	10.6
Actuated g/C Ratio	0.75	1.00	0.84	0.84	0.09	0.09
v/c Ratio	0.55	0.14	0.39	0.64	0.50	0.52
Control Delay	5.0	0.1	5.9	4.6	57.5	15.5
Queue Delay	0.1	0.0	0.0	0.0	0.0	0.0
Total Delay	5.1	0.1	5.9	4.6	57.5	15.5
LOS	A	A	A	A	E	B
Approach Delay	4.5			4.7	37.5	
Approach LOS	A			A	D	

Intersection Summary	
Area Type:	Other
Cycle Length: 120	
Actuated Cycle Length: 120	
Offset: 0 (0%), Referenced to phase 4:EBT and 8:WBTL, Start of Yellow	
Natural Cycle: 60	
Control Type: Actuated-Coordinated	

Maximum v/c Ratio: 0.64	
Intersection Signal Delay: 6.9	Intersection LOS: A
Intersection Capacity Utilization 59.3%	ICU Level of Service B
Analysis Period (min) 15	

Splits and Phases: 28: MALL DRIVE 1 & CEDAR ROAD

HCM Unsignalized Intersection Capacity Analysis
6: GEORGE ZEIGER & MALL DR 3

7/1/2013

Movement	EBL	EBR	NBL	NBT	SBT	SBR
Lane Configurations						
Volume (veh/h)	103	42	36	264	220	81
Sign Control	Stop			Free	Free	
Grade	0%			0%	0%	
Peak Hour Factor	0.92	0.92	0.92	0.92	0.92	0.92
Hourly flow rate (vph)	112	46	39	287	239	88
Pedestrians						
Lane Width (ft)						
Walking Speed (ft/s)						
Percent Blockage						
Right turn flare (veh)						
Median type				None	None	
Median storage veh)						
Upstream signal (ft)					1057	
pX, platoon unblocked						
vC, conflicting volume	505	164	327			
vC1, stage 1 conf vol						
vC2, stage 2 conf vol						
vCu, unblocked vol	505	164	327			
tC, single (s)	6.8	6.9	4.1			
tC, 2 stage (s)						
tF (s)	3.5	3.3	2.2			
p0 queue free %	77	95	97			
cM capacity (veh/h)	481	852	1229			

Direction, Lane #	EB 1	EB 2	NB 1	NB 2	SB 1	SB 2
Volume Total	112	46	135	191	159	168
Volume Left	112	0	39	0	0	0
Volume Right	0	46	0	0	0	88
cSH	481	852	1229	1700	1700	1700
Volume to Capacity	0.23	0.05	0.03	0.11	0.09	0.10
Queue Length 95th (ft)	22	4	2	0	0	0
Control Delay (s)	14.7	9.5	2.5	0.0	0.0	0.0
Lane LOS	B	A	A			
Approach Delay (s)	13.2		1.0		0.0	
Approach LOS	B					

Intersection Summary			
Average Delay	3.0		
Intersection Capacity Utilization	32.7%	ICU Level of Service	A
Analysis Period (min)	15		

Movement	EBL	EBR	NBL	NBT	SBT	SBR
Lane Configurations						
Volume (veh/h)	278	39	24	22	16	246
Sign Control	Free			Stop	Stop	
Grade	0%			0%	0%	
Peak Hour Factor	0.92	0.92	0.92	0.92	0.92	0.92
Hourly flow rate (vph)	302	42	26	24	17	267
Pedestrians						
Lane Width (ft)						
Walking Speed (ft/s)						
Percent Blockage						
Right turn flare (veh)						
Median type	None					
Median storage veh)						
Upstream signal (ft)	611					
pX, platoon unblocked						
vC, conflicting volume	0		902	626	647	0
vC1, stage 1 conf vol						
vC2, stage 2 conf vol						
vCu, unblocked vol	0		902	626	647	0
tC, single (s)	4.1		7.1	6.5	6.5	6.2
tC, 2 stage (s)						
tF (s)	2.2		3.5	4.0	4.0	3.3
p0 queue free %	81		84	93	95	75
cM capacity (veh/h)	1623		160	326	317	1085

Direction, Lane #	EB 1	EB 2	NB 1	SB 1	SB 2
Volume Total	201	143	50	107	178
Volume Left	201	101	26	0	0
Volume Right	0	42	0	89	178
cSH	1623	1623	212	778	1085
Volume to Capacity	0.19	0.19	0.24	0.14	0.16
Queue Length 95th (ft)	17	17	22	12	15
Control Delay (s)	7.7	5.9	27.2	10.4	9.0
Lane LOS	A	A	D	B	A
Approach Delay (s)	7.0		27.2	9.5	
Approach LOS			D	A	

Intersection Summary			
Average Delay	9.5		
Intersection Capacity Utilization	25.0%	ICU Level of Service	A
Analysis Period (min)	15		

Movement	EBL	EBR	NBL	NBT	SBT	SBR
Lane Configurations						
Volume (veh/h)	0	4	4	999	797	8
Sign Control	Stop			Free	Free	
Grade	0%			0%	0%	
Peak Hour Factor	0.92	0.92	0.92	0.92	0.92	0.92
Hourly flow rate (vph)	0	4	4	1086	866	9
Pedestrians						
Lane Width (ft)						
Walking Speed (ft/s)						
Percent Blockage						
Right turn flare (veh)						
Median type				None	None	
Median storage veh)						
Upstream signal (ft)				1090	692	
pX, platoon unblocked	0.88	0.84	0.84			
vC, conflicting volume	1422	438	875			
vC1, stage 1 conf vol						
vC2, stage 2 conf vol						
vCu, unblocked vol	838	0	483			
tC, single (s)	6.8	6.9	4.1			
tC, 2 stage (s)						
tF (s)	3.5	3.3	2.2			
p0 queue free %	100	100	100			
cM capacity (veh/h)	267	915	908			

Direction, Lane #	EB 1	NB 1	NB 2	SB 1	SB 2
Volume Total	4	366	724	578	297
Volume Left	0	4	0	0	0
Volume Right	4	0	0	0	9
cSH	915	908	1700	1700	1700
Volume to Capacity	0.00	0.00	0.43	0.34	0.17
Queue Length 95th (ft)	0	0	0	0	0
Control Delay (s)	9.0	0.2	0.0	0.0	0.0
Lane LOS	A	A			
Approach Delay (s)	9.0	0.1		0.0	
Approach LOS	A				

Intersection Summary			
Average Delay	0.0		
Intersection Capacity Utilization	40.4%	ICU Level of Service	A
Analysis Period (min)	15		

Movement	EBL	EBR	NBL	NBT	SBT	SBR
Lane Configurations						
Volume (veh/h)	22	64	58	981	746	55
Sign Control	Stop			Free	Free	
Grade	0%			0%	0%	
Peak Hour Factor	0.92	0.92	0.92	0.92	0.92	0.92
Hourly flow rate (vph)	24	70	63	1066	811	60
Pedestrians						
Lane Width (ft)						
Walking Speed (ft/s)						
Percent Blockage						
Right turn flare (veh)						
Median type				None	None	
Median storage veh)						
Upstream signal (ft)				560	1222	
pX, platoon unblocked	0.91	0.87	0.87			
vC, conflicting volume	1500	435	871			
vC1, stage 1 conf vol						
vC2, stage 2 conf vol						
vCu, unblocked vol	703	43	545			
tC, single (s)	6.8	6.9	4.1			
tC, 2 stage (s)						
tF (s)	3.5	3.3	2.2			
p0 queue free %	92	92	93			
cM capacity (veh/h)	315	883	885			

Direction, Lane #	EB 1	NB 1	NB 2	SB 1	SB 2
Volume Total	93	418	711	541	330
Volume Left	24	63	0	0	0
Volume Right	70	0	0	0	60
cSH	604	885	1700	1700	1700
Volume to Capacity	0.15	0.07	0.42	0.32	0.19
Queue Length 95th (ft)	14	6	0	0	0
Control Delay (s)	12.0	2.1	0.0	0.0	0.0
Lane LOS	B	A			
Approach Delay (s)	12.0	0.8		0.0	
Approach LOS	B				

Intersection Summary			
Average Delay	1.0		
Intersection Capacity Utilization	66.3%	ICU Level of Service	C
Analysis Period (min)	15		

Movement	EBT	EBR	WBL	WBT	NBL	NBR
Lane Configurations						
Volume (veh/h)	415	70	79	407	53	39
Sign Control	Free			Free	Stop	
Grade	0%			0%	0%	
Peak Hour Factor	0.92	0.92	0.92	0.92	0.92	0.92
Hourly flow rate (vph)	451	76	86	442	58	42
Pedestrians						
Lane Width (ft)						
Walking Speed (ft/s)						
Percent Blockage						
Right turn flare (veh)						
Median type	None			None		
Median storage veh)						
Upstream signal (ft)	820			400		
pX, platoon unblocked						
vC, conflicting volume			527		882	264
vC1, stage 1 conf vol						
vC2, stage 2 conf vol						
vCu, unblocked vol			527		882	264
tC, single (s)			4.1		6.8	6.9
tC, 2 stage (s)						
tF (s)			2.2		3.5	3.3
p0 queue free %			92		78	94
cM capacity (veh/h)			1036		262	735

Direction, Lane #	EB 1	EB 2	WB 1	WB 2	NB 1	NB 2
Volume Total	301	226	233	295	58	42
Volume Left	0	0	86	0	58	0
Volume Right	0	76	0	0	0	42
cSH	1700	1700	1036	1700	262	735
Volume to Capacity	0.18	0.13	0.08	0.17	0.22	0.06
Queue Length 95th (ft)	0	0	7	0	20	5
Control Delay (s)	0.0	0.0	3.7	0.0	22.6	10.2
Lane LOS			A		C	B
Approach Delay (s)	0.0		1.7		17.3	
Approach LOS					C	

Intersection Summary			
Average Delay	2.3		
Intersection Capacity Utilization	40.6%	ICU Level of Service	A
Analysis Period (min)	15		

Movement	WBL	WBR	NBT	NBR	SBL	SBT
Lane Configurations						
Volume (veh/h)	37	63	302	65	98	264
Sign Control	Stop		Free			Free
Grade	0%		0%			0%
Peak Hour Factor	0.92	0.92	0.92	0.92	0.92	0.92
Hourly flow rate (vph)	40	68	328	71	107	287
Pedestrians						
Lane Width (ft)						
Walking Speed (ft/s)						
Percent Blockage						
Right turn flare (veh)						
Median type			None			None
Median storage veh)						
Upstream signal (ft)						566
pX, platoon unblocked						
vC, conflicting volume	720	199			399	
vC1, stage 1 conf vol						
vC2, stage 2 conf vol						
vCu, unblocked vol	720	199			399	
tC, single (s)	6.8	6.9			4.1	
tC, 2 stage (s)						
tF (s)	3.5	3.3			2.2	
p0 queue free %	88	92			91	
cM capacity (veh/h)	329	808			1156	

Direction, Lane #	WB 1	WB 2	NB 1	NB 2	SB 1	SB 2	SB 3
Volume Total	40	68	219	180	107	143	143
Volume Left	40	0	0	0	107	0	0
Volume Right	0	68	0	71	0	0	0
cSH	329	808	1700	1700	1156	1700	1700
Volume to Capacity	0.12	0.08	0.13	0.11	0.09	0.08	0.08
Queue Length 95th (ft)	10	7	0	0	8	0	0
Control Delay (s)	17.4	9.9	0.0	0.0	8.4	0.0	0.0
Lane LOS	C	A			A		
Approach Delay (s)	12.7		0.0		2.3		
Approach LOS	B						

Intersection Summary			
Average Delay	2.5		
Intersection Capacity Utilization	29.2%	ICU Level of Service	A
Analysis Period (min)	15		

Movement	EBT	EBR	WBL	WBT	NBL	NBR
Lane Configurations						
Volume (veh/h)	1525	35	18	1880	6	27
Sign Control	Free			Free	Stop	
Grade	0%			0%	0%	
Peak Hour Factor	0.92	0.92	0.92	0.92	0.92	0.92
Hourly flow rate (vph)	1658	38	20	2043	7	29
Pedestrians						
Lane Width (ft)						
Walking Speed (ft/s)						
Percent Blockage						
Right turn flare (veh)						
Median type	None			None		
Median storage veh)						
Upstream signal (ft)	434			331		
pX, platoon unblocked			0.67		0.78	0.67
vC, conflicting volume			1696		2738	848
vC1, stage 1 conf vol						
vC2, stage 2 conf vol						
vCu, unblocked vol			1052		1354	0
tC, single (s)			4.1		6.8	6.9
tC, 2 stage (s)						
tF (s)			2.2		3.5	3.3
p0 queue free %			96		94	96
cM capacity (veh/h)			440		106	726

Direction, Lane #	EB 1	EB 2	WB 1	WB 2	WB 3	NB 1	NB 2
Volume Total	1105	591	20	1022	1022	7	29
Volume Left	0	0	20	0	0	7	0
Volume Right	0	38	0	0	0	0	29
cSH	1700	1700	440	1700	1700	106	726
Volume to Capacity	0.65	0.35	0.04	0.60	0.60	0.06	0.04
Queue Length 95th (ft)	0	0	3	0	0	5	3
Control Delay (s)	0.0	0.0	13.6	0.0	0.0	41.3	10.2
Lane LOS			B			E	B
Approach Delay (s)	0.0		0.1			15.8	
Approach LOS						C	

Intersection Summary			
Average Delay	0.2		
Intersection Capacity Utilization	62.0%	ICU Level of Service	B
Analysis Period (min)	15		

Movement	WBL	WBR	NBT	NBR	SBL	SBT
Lane Configurations						
Volume (veh/h)	34	65	947	52	34	771
Sign Control	Stop		Free			Free
Grade	0%		0%			0%
Peak Hour Factor	0.92	0.92	0.92	0.92	0.92	0.92
Hourly flow rate (vph)	37	71	1029	57	37	838
Pedestrians						
Lane Width (ft)						
Walking Speed (ft/s)						
Percent Blockage						
Right turn flare (veh)						
Median type			None			None
Median storage veh)						
Upstream signal (ft)						462
pX, platoon unblocked	0.84					
vC, conflicting volume	1551	543			1086	
vC1, stage 1 conf vol						
vC2, stage 2 conf vol						
vCu, unblocked vol	1266	543			1086	
tC, single (s)	6.8	6.9			4.1	
tC, 2 stage (s)						
tF (s)	3.5	3.3			2.2	
p0 queue free %	71	85			94	
cM capacity (veh/h)	127	484			638	

Direction, Lane #	WB 1	WB 2	NB 1	NB 2	SB 1	SB 2
Volume Total	37	71	686	400	316	559
Volume Left	37	0	0	0	37	0
Volume Right	0	71	0	57	0	0
cSH	127	484	1700	1700	638	1700
Volume to Capacity	0.29	0.15	0.40	0.24	0.06	0.33
Queue Length 95th (ft)	28	13	0	0	5	0
Control Delay (s)	44.7	13.7	0.0	0.0	2.0	0.0
Lane LOS	E	B			A	
Approach Delay (s)	24.3		0.0		0.7	
Approach LOS	C					

Intersection Summary			
Average Delay	1.6		
Intersection Capacity Utilization	56.3%	ICU Level of Service	B
Analysis Period (min)	15		

Movement	EBL	EBT	EBR	WBL	WBT	WBR	NBL	NBT	NBR	SBL	SBT	SBR
Lane Configurations												
Volume (veh/h)	26	23	44	2	11	36	24	132	10	36	140	38
Sign Control		Stop			Stop			Free			Free	
Grade		0%			0%			0%			0%	
Peak Hour Factor	0.92	0.92	0.92	0.92	0.92	0.92	0.92	0.92	0.92	0.92	0.92	0.92
Hourly flow rate (vph)	28	25	48	2	12	39	26	143	11	39	152	41
Pedestrians												
Lane Width (ft)												
Walking Speed (ft/s)												
Percent Blockage												
Right turn flare (veh)												
Median type								None			None	
Median storage veh)												
Upstream signal (ft)												
pX, platoon unblocked												
vC, conflicting volume	497	458	173	512	473	149	193			154		
vC1, stage 1 conf vol												
vC2, stage 2 conf vol												
vCu, unblocked vol	497	458	173	512	473	149	193			154		
tC, single (s)	7.1	6.5	6.2	7.1	6.5	6.2	4.1			4.1		
tC, 2 stage (s)												
tF (s)	3.5	4.0	3.3	3.5	4.0	3.3	2.2			2.2		
p0 queue free %	94	95	95	99	97	96	98			97		
cM capacity (veh/h)	437	477	871	413	467	898	1380			1426		

Direction, Lane #	EB 1	WB 1	NB 1	SB 1
Volume Total	101	53	180	233
Volume Left	28	2	26	39
Volume Right	48	39	11	41
cSH	588	716	1380	1426
Volume to Capacity	0.17	0.07	0.02	0.03
Queue Length 95th (ft)	15	6	1	2
Control Delay (s)	12.4	10.4	1.2	1.5
Lane LOS	B	B	A	A
Approach Delay (s)	12.4	10.4	1.2	1.5
Approach LOS	B	B		

Intersection Summary			
Average Delay	4.2		
Intersection Capacity Utilization	35.1%	ICU Level of Service	A
Analysis Period (min)	15		